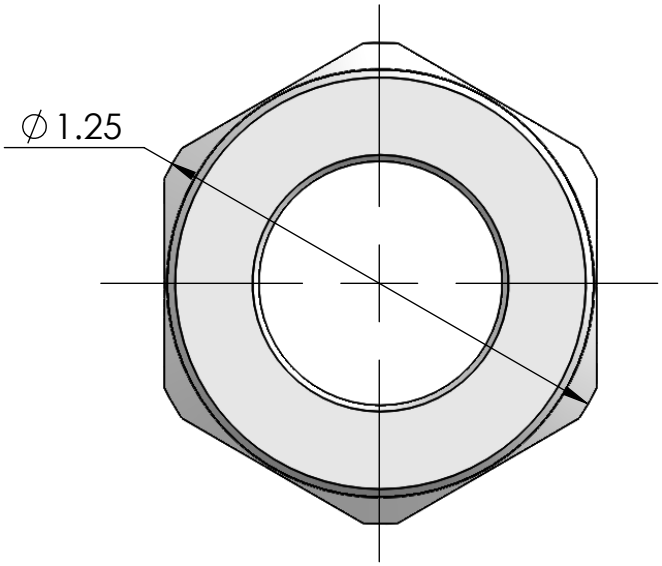

NUT

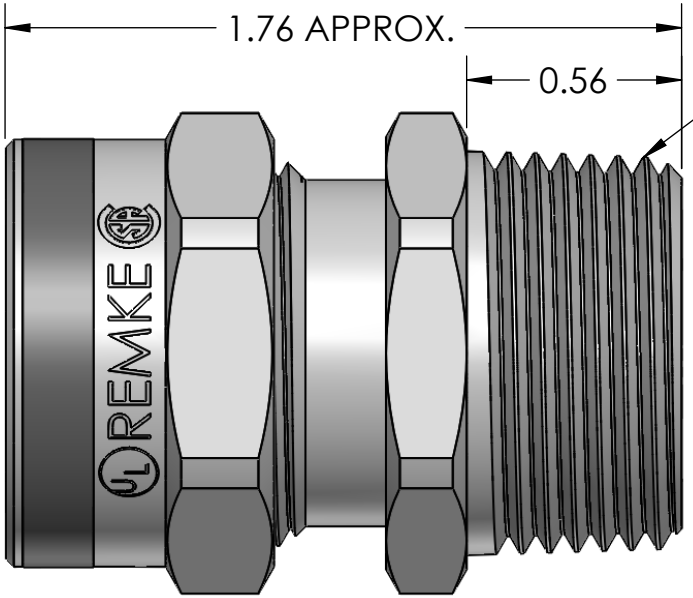

RoHS COMPLIANT

ITEM NO.	PART NUMBER	DESCRIPTION	MATERIAL	QTY.
1	RSR-2100-B	BODY	ALUMINUM	1
2	SRB-109 - SRB-110	BUSHING	NEOPRENE	1
3	SW-100	WASHER	C.R.S. ZINC PLATED	1
4	RSR-100-N	NUT	ALUMINUM	1
5	LN-75	LOCK NUT	ADD: L, C.R.S. ZINC PLATED	1

PART NUMBER	SEALING RANGE	BODY BORE
RSR-2103	.125 - .188	.610
RSR-2104	.188 - .250	.610
RSR-2105	.250 - .312	.610
RSR-2106	.312 - .375	.610
RSR-2107	.375 - .438	.610
RSR-2108	.438 - .500	.610
RSR-2109	.500 - .562	.610
RSR-2110	.562 - .625	.610

REV.	DATE	CHANGE
A	5/01/13	DRAWING RELEASED

UNLESS OTHERWISE SPECIFIED:
DIMENSIONS ARE IN INCHES
TOLERANCES:
FRACTIONAL ± 1/64
ANGULAR: MACH ±1° BEND ±1°
ONE PLACE DECIMAL ±.015
TWO PLACE DECIMAL ±.010
THREE PLACE DECIMAL ±.005

INTERPRET GEOMETRIC TOLERANCING PER:

MATERIAL ALUMINUM

FINISH

DO NOT SCALE DRAWING

	NAME	DATE
DRAWN	JCN	5/13
CHECKED		
ENG APPR.		
MFG APPR.		
Q.A.		

PROPRIETARY AND CONFIDENTIAL

THE INFORMATION CONTAINED IN THIS DRAWING IS THE SOLE PROPERTY OF REMKE INDUSTRIES. ANY REPRODUCTION IN PART OR AS A WHOLE WITHOUT THE WRITTEN PERMISSION OF REMKE INDUSTIRES IS PROHIBITED.

REMKE
REMKE INDUSTRIES
310 CHADDICK DR, WHEELING, IL. 60090

TITLE: RSR-2100 SERIES

SIZE A

DWG. NO. RSR-2100 ASSEMBLY

SCALE: 2:1

SHEET 1 OF 1

5 4 3 2 1