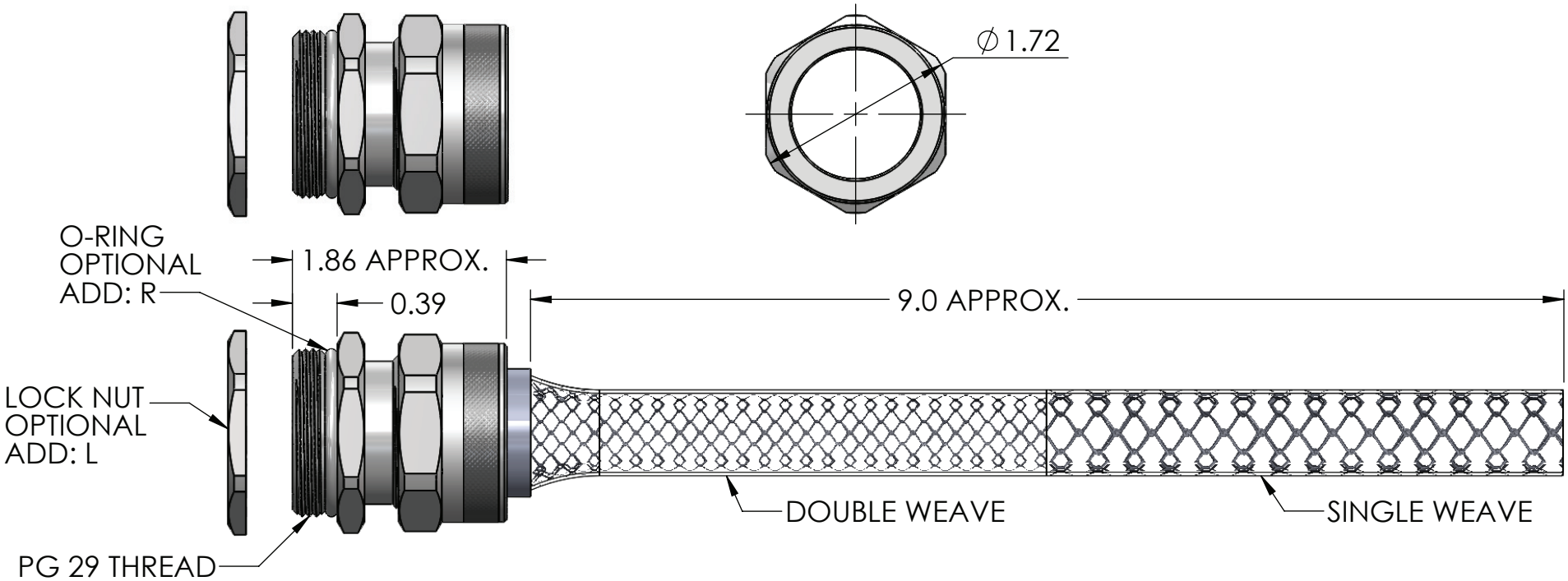

ITEM NO.	PART NUMBER	DESCRIPTION	MATERIAL	QTY.
1	RPG-29300-B	BODY	ALUMINIUM	1
2	SRB-311 - SRB-312	BUSHING	NEOPRENE	1
3	SOR-3	O-RING	BUNA-N	1
4	RSR-300-ND2	NUT	ALUMINIUM	1
5	RLP29-BR	LOCK NUT	BRASS, NICKLE PLATED	1
6	R-212-D	MESH	STAINLESS	1

RoHS COMPLIANT

CATALOG NUMBER	SEALING RANGE	BODY BORE
RPG-29311-E	.562 - .688	1.000
RPG-29312-E	.625 - .750	1.000

REV.	DATE	CHANGE
A	8/5/13	DRAWING RELEASED

UNLESS OTHERWISE SPECIFIED:
DIMENSIONS ARE IN INCHES
TOLERANCES:
FRACTIONAL ± 1/64
ANGULAR: MACH ±1° BEND ±1°
ONE PLACE DECIMAL ±.015
TWO PLACE DECIMAL ±.010
THREE PLACE DECIMAL ±.005

INTERPRET GEOMETRIC TOLERANCING PER:

MATERIAL ALUMINUM

FINISH

DO NOT SCALE DRAWING

	NAME	DATE
DRAWN	JCN	8/13
CHECKED		
ENG APPR.		
MFG APPR.		
Q.A.		

PROPRIETARY AND CONFIDENTIAL
THE INFORMATION CONTAINED IN THIS DRAWING IS THE SOLE PROPERTY OF REMKE INDUSTRIES. ANY REPRODUCTION IN PART OR AS A WHOLE WITHOUT THE WRITTEN PERMISSION OF REMKE INDUSTIRES IS PROHIBITED.

BRIDGEPORT

TITLE:
RPG-29311-29312-E SERIES

SIZE A

DWG. NO. RPG-29311-29312-E ASSEMBLY

SCALE: 1:1.375

SHEET 1 OF 1

5 4 3 2 1