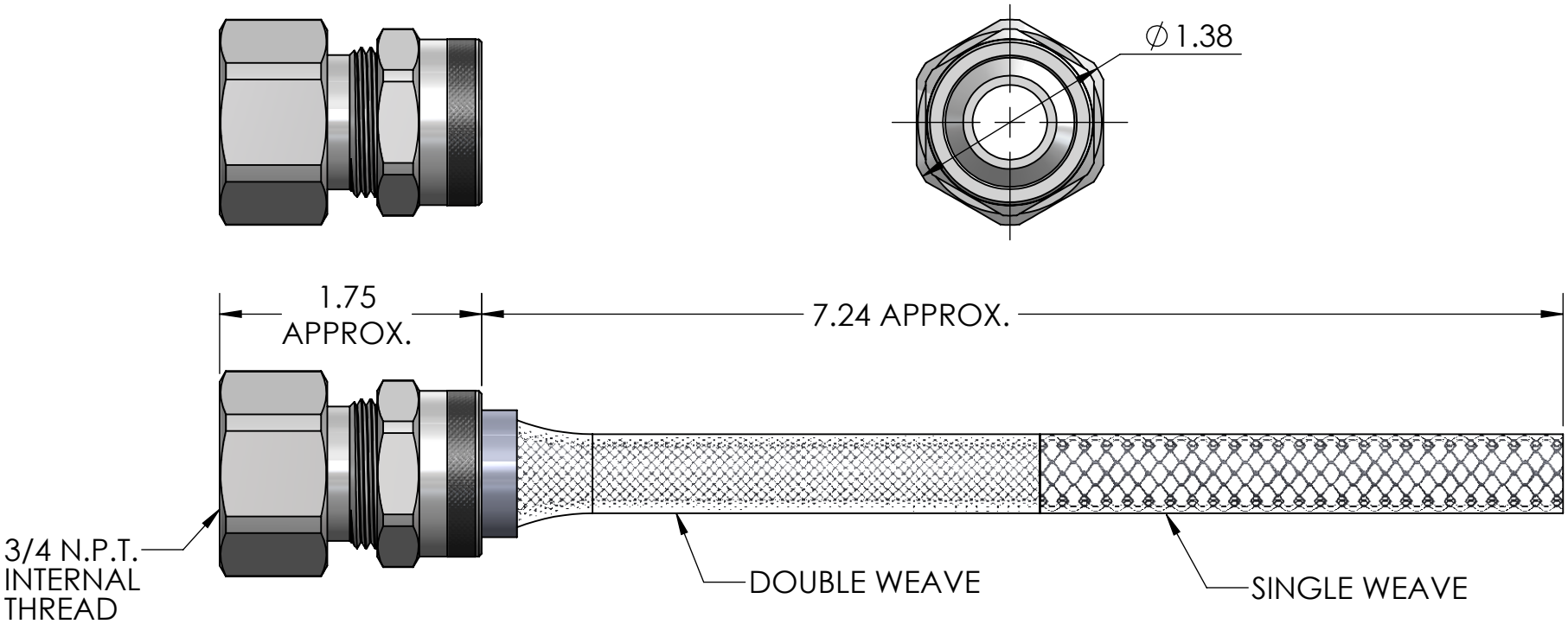

ITEM NO.	PART NUMBER	DESCRIPTION	MATERIAL	QTY.
1	RSRF-2100-B	BODY	ALUMINUM	1
2	SRB-107-108	BUSHING	NEOPRENE	1
3	RSR-100-NDB	NUT	ALUMINUM	1
4	R-108-D	MESH	STAINLESS STEEL	1

RoHS COMPLIANT

CATALOG NUMBER	SEALING RANGE	BODY BORE
RSRF-2107-E	.375 - .438	.625
RSRF-2108-E	.438 - .500	.625

REV.	DATE	CHANGE
A	7/8/15	DRAWING RELEASED

UNLESS OTHERWISE SPECIFIED:
DIMENSIONS ARE IN INCHES
TOLERANCES:
FRACTIONAL ± 1/64
ANGULAR: MACH ±1° BEND ±1°
ONE PLACE DECIMAL ±.015
TWO PLACE DECIMAL ±.010
THREE PLACE DECIMAL ±.005

INTERPRET GEOMETRIC TOLERANCING PER:

MATERIAL

FINISH

DO NOT SCALE DRAWING

	NAME	DATE
DRAWN	JCN	7/15
CHECKED		
ENG APPR.		
MFG APPR.		
Q.A.		

PROPRIETARY AND CONFIDENTIAL

THE INFORMATION CONTAINED IN THIS DRAWING IS THE SOLE PROPERTY OF REMKE INDUSTRIES. ANY REPRODUCTION IN PART OR AS A WHOLE WITHOUT THE WRITTEN PERMISSION OF REMKE INDUSTIRES IS PROHIBITED.

BRIDGEPORT

TITLE:

RSRF-2000-E SERIES

SIZE A

DWG. NO. RSRF-2107-2108-E ASSEMBLY

SCALE: 0.9:1

SHEET 1 OF 1

5 4 3 2 1

T:\Solidworks Files\Assymblies (Customer Drawings)\ALUM\MESH ASSEMBLYS\DRW\