c UL us LISTED

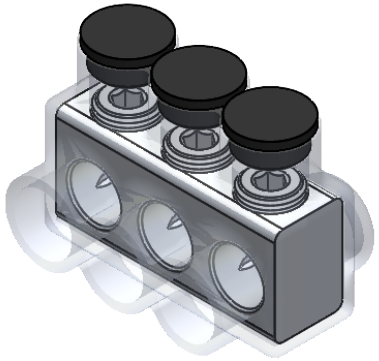

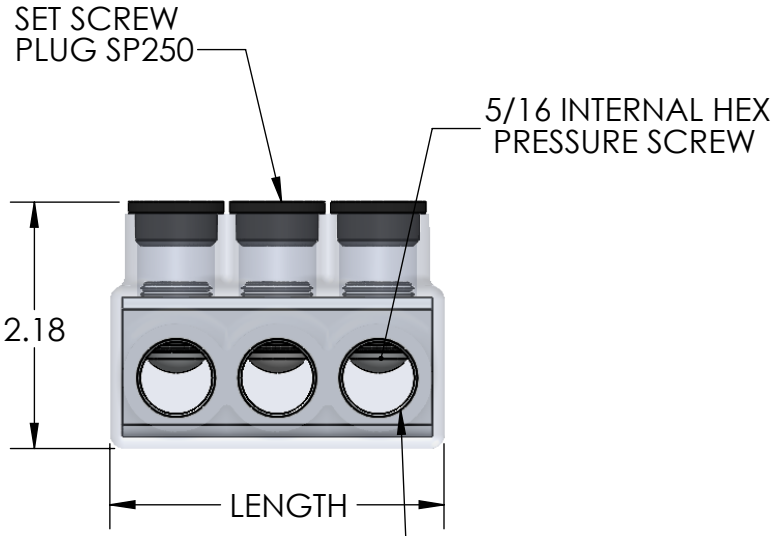

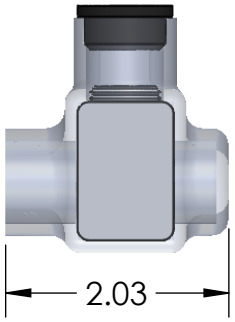

IPL250-3C SHOWN

PART NUMBER	NO. OF PORTS	LENGTH
IPL250-3C	3	2.93
IPL250-4C	4	3.80
IPL250-5C	5	4.66
IPL250-6C	6	5.22
IPL250-8C	8	7.24
IPL250-10C	10	8.97

CONTACT NSi FOR SALES @ 800.321.5847

NOTES:
1. CONNECTOR MANUFACTURED FROM 6061-T6 ALUMINUM ALLOY.
2. UL LISTED PER UL486A/B SPECIFICATIONS FOR 600V.
3. DUAL RATED FOR 90°C COPPER AND/OR ALUMINUM CONDUCTOR.
4. COLD TEMPERATURE RATED TO -45°C.
5. HIGH DIELECTRIC STRENGTH INSULATION IS ABRASION AND CHEMICAL RESISTANT.

POLARIS
SALES . CO . INC

PROPRIETARY AND CONFIDENTIAL	11625 PROSPEROUS DRIVE ODESSA, FL 33556
THE INFORMATION CONTAINED IN THIS DRAWING IS THE SOLE PROPERTY OF POLARIS SALES CO. INC. ANY REPRODUCTION IN PART OR AS A WHOLE WITHOUT THE WRITTEN PERMISSION OF POLARIS SALES CO. INC. IS PROHIBITED.	TITLE: CLEAR INSULATED 250 CONNECTOR
NAME / DATE — DRAWN BY: T.MITCHELL 11/29/2021	DWG. NO. IPL250C SERIES
MATERIAL: N/A	SCALE: N/A — SHEET: 1 OF 1