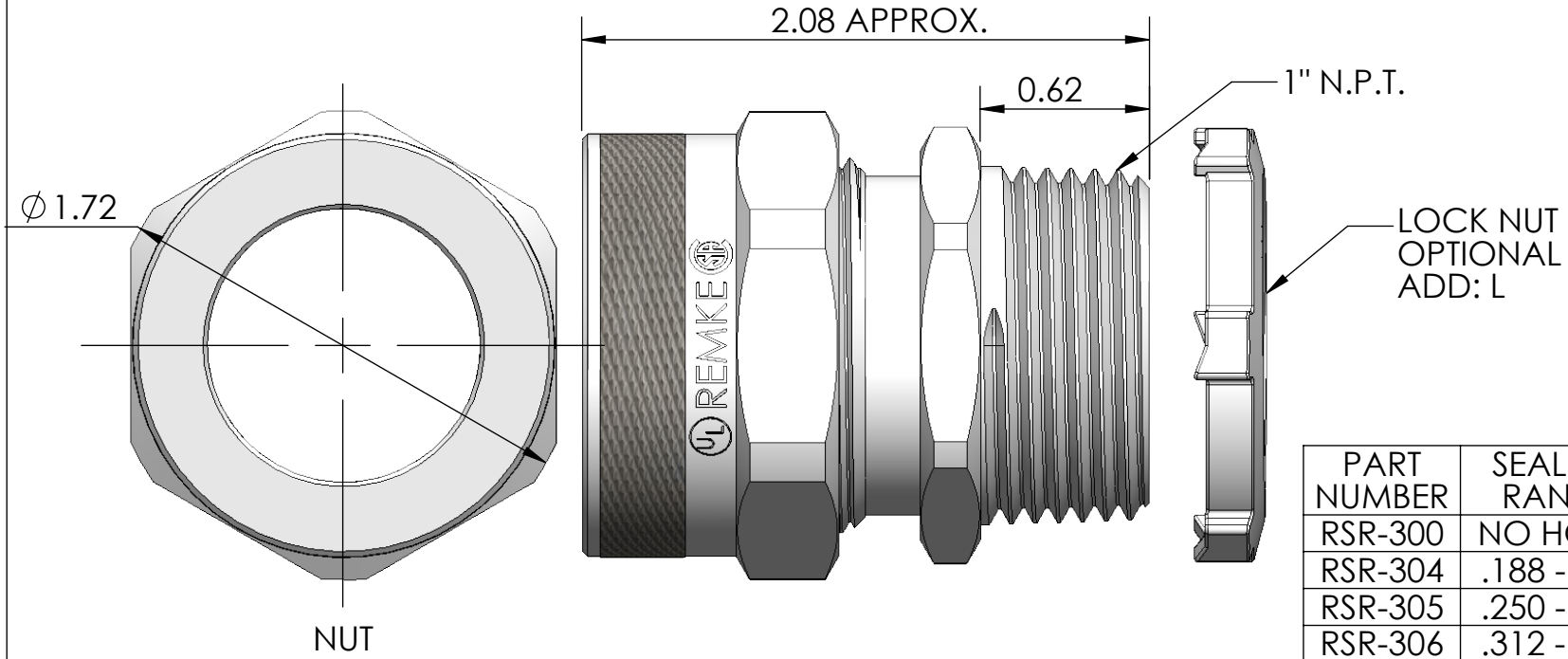

RoHS COMPLIANT

PART NUMBER	SEALING RANGE	BODY BORE
RSR-300	NO HOLES	.990
RSR-304	.188 - .250	.990
RSR-305	.250 - .312	.990
RSR-306	.312 - .375	.990
RSR-307	.375 - .437	.990
RSR-308	.438 - .500	.990
RSR-309	.500 - .562	.990
RSR-310	.562 - .625	.990
RSR-311	.562 - .688	.990
RSR-312	.625 - .750	.990
RSR-313	.688 - .812	.990
RSR-314	.750 - .875	.990
RSR-315	.812 - .938	.990
RSR-316	.875 - 1.000	.990

ITEM NO.	PART NUMBER	DESCRIPTION	MATERIAL	QTY.
1	RSR-300-B	BODY	ALUMINUM	1
2	SRB-300	BUSHING	NEOPRENE	1
3	SW-300	WASHER	C.R.S. ZINC PLATED	1
4	RSR-300-N	NUT	ALUMINUM	1
5	LN-100	LOCK NUT	ADD: L, C.R.S. ZINC PLATED	1

REV.	DATE	CHANGE
A	4/22/13	DRAWING RELEASED

UNLESS OTHERWISE SPECIFIED:
DIMENSIONS ARE IN INCHES
TOLERANCES:
FRACTIONAL ± 1/64
ANGULAR: MACH ±1° BEND ±1°
ONE PLACE DECIMAL ±.015
TWO PLACE DECIMAL ±.010
THREE PLACE DECIMAL ±.005

INTERPRET GEOMETRIC TOLERANCING PER:

MATERIAL ALUMINUM

FINISH

DO NOT SCALE DRAWING

	NAME	DATE
DRAWN	JCN	4/13
CHECKED		
ENG APPR.		
MFG APPR.		
Q.A.		

PROPRIETARY AND CONFIDENTIAL

THE INFORMATION CONTAINED IN THIS DRAWING IS THE SOLE PROPERTY OF REMKE INDUSTRIES. ANY REPRODUCTION IN PART OR AS A WHOLE WITHOUT THE WRITTEN PERMISSION OF REMKE INDUSTIRES IS PROHIBITED.

REMKE
REMKE INDUSTRIES
310 CHADDICK DR, WHEELING, IL. 60090

TITLE: RSR-300 SERIES

SIZE **A**

DWG. NO. RSR-300 ASSEMBLY

SCALE: 3:2

SHEET 1 OF 1

5 4 3 2 1