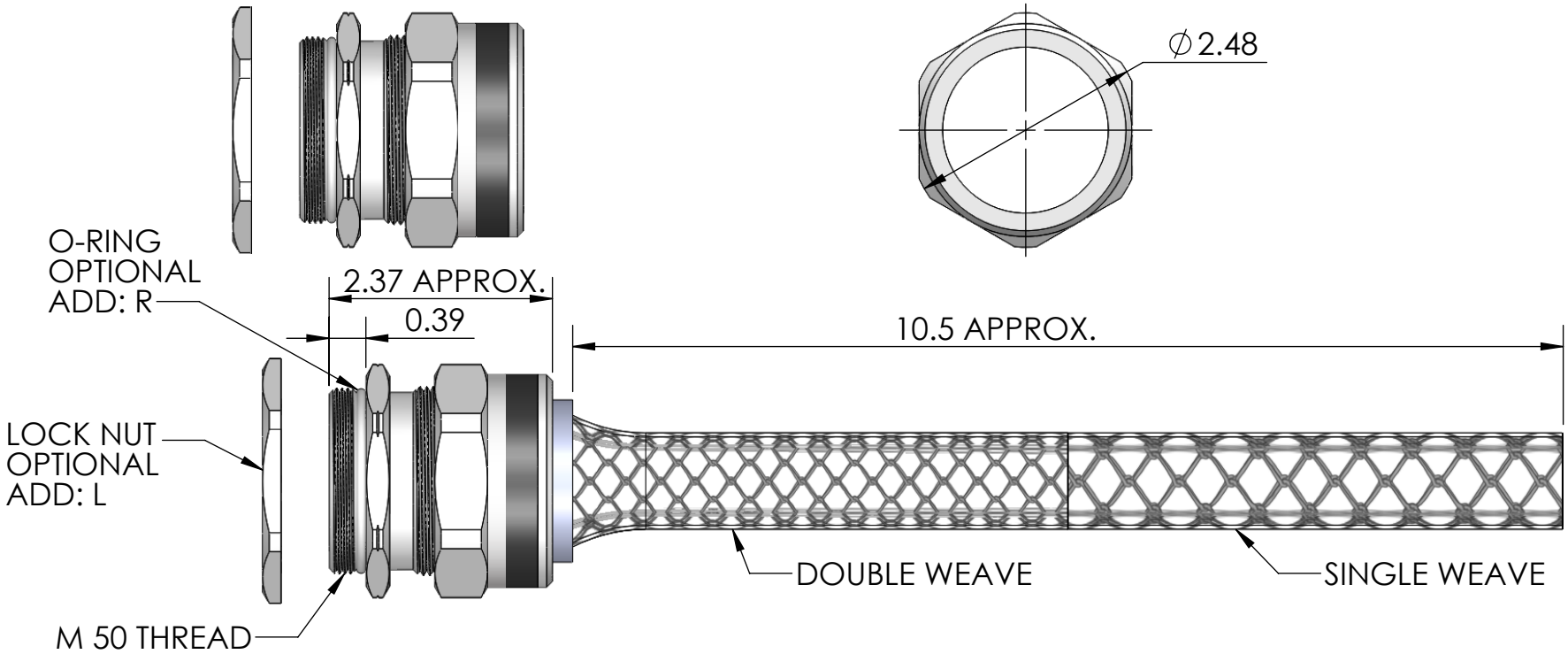

ITEM NO.	PART NUMBER	DESCRIPTION	MATERIAL	QTY.
1	RSM-50500-B	BODY	ALUMINUM	1
2	SRB-514 - SRB-516	BUSHING	NEOPRENE	1
3	SOR-51	O-RING	BUNA-N	1
4	RSR-500-ND	NUT	ALUMINUM	1
5	RLM50-BR	LOCK NUT	BRASS, NICKLE PLATED	1
6	R-516-D	MESH	STAINLESS WIRE	1

RoHS COMPLIANT

CATALOG NUMBER	SEALING RANGE	BODY BORE
RSM-50514-E	.750 - .875	1.438
RSM-50516-E	.875 - 1.000	1.438

REV.	DATE	CHANGE
A	8/16/13	DRAWING RELEASED

UNLESS OTHERWISE SPECIFIED:
DIMENSIONS ARE IN INCHES
TOLERANCES:
FRACTIONAL ± 1/64
ANGULAR: MACH ±1° BEND ±1°
ONE PLACE DECIMAL ±.015
TWO PLACE DECIMAL ±.010
THREE PLACE DECIMAL ±.005

INTERPRET GEOMETRIC TOLERANCING PER:

MATERIAL ALUMINUM

FINISH

DO NOT SCALE DRAWING

		DATE
DRAWN	JCN	8/13
CHECKED		
ENG APPR.		
MFG APPR.		
Q.A.		

PROPRIETARY AND CONFIDENTIAL

THE INFORMATION CONTAINED IN THIS DRAWING IS THE SOLE PROPERTY OF REMKE INDUSTRIES. ANY REPRODUCTION IN PART OR AS A WHOLE WITHOUT THE WRITTEN PERMISSION OF REMKE INDUSTIRES IS PROHIBITED.

BRIDGEPORT

TITLE:

RSM-50514-50516-E SERIES

SIZE A

DWG. NO. RSM-50514-50516-E ASSEMBLY

SCALE: 1:1.8

SHEET 1 OF 1

5 4 3 2 1