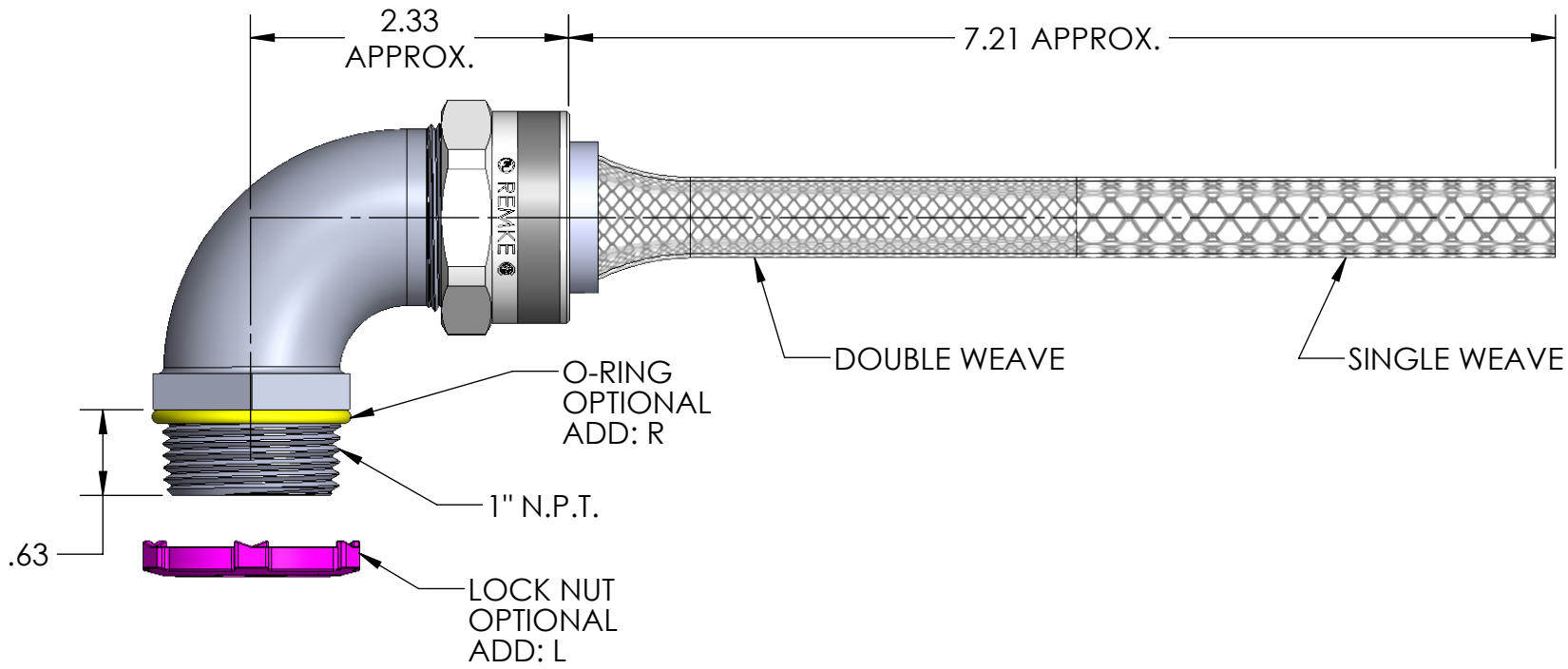

ITEM NO.	PART NUMBER	DESCRIPTION	MATERIAL	QTY.
1	RSR-9300-B	BODY	ALUMINUM	1
2	SRB-309-310	BUSHING	NEOPRENE	1
3	RSR-300-ND2	NUT	ALUMINUM	1
4	R-210-D	MESH	STAINLESS WIRE	1
5	SOR-3	O-RING	ADD: R, BUNA-N	1
6	LN-100	LOCK NUT	ADD:L, C.R.S. ZINC PLATED	1

RoHS COMPLIANT

CATALOG NUMBER	SEALING RANGE	BODY BORE
RSR-9309-E	.438 - .500	1.000
RSR-9310-E	.500 - .625	1.000

REV.	DATE	CHANGE
A	4/22/15	DRAWING RELEASED

UNLESS OTHERWISE SPECIFIED:
DIMENSIONS ARE IN INCHES
TOLERANCES:
FRACTIONAL ± 1/64
ANGULAR: MACH ±1° BEND ±1°
ONE PLACE DECIMAL ±.015
TWO PLACE DECIMAL ±.010
THREE PLACE DECIMAL ±.005

INTERPRET GEOMETRIC TOLERANCING PER:

MATERIAL

FINISH

DO NOT SCALE DRAWING

	NAME	DATE
DRAWN	JCN	4/15
CHECKED		
ENG APPR.		
MFG APPR.		
Q.A.		

PROPRIETARY AND CONFIDENTIAL

THE INFORMATION CONTAINED IN THIS DRAWING IS THE SOLE PROPERTY OF REMKE INDUSTRIES. ANY REPRODUCTION IN PART OR AS A WHOLE WITHOUT THE WRITTEN PERMISSION OF REMKE INDUSTIRES IS PROHIBITED.

REMKE
REMKE INDUSTRIES
310 CHADDICK DR, WHEELING, IL. 60090

TITLE:
RSR-9309-9310-E SERIES

SIZE **A**
DWG. NO. RSR-9309-9310-E
90 DEGREE ASSEMBLY

SCALE 0.75:1
SHEET 1 OF 1

5 4 3 2 1

T:\SOLIDWORKS FILES\Assymblies (Customer Drawings)\ALUM\MESH ASSEMBLYS\DRW\