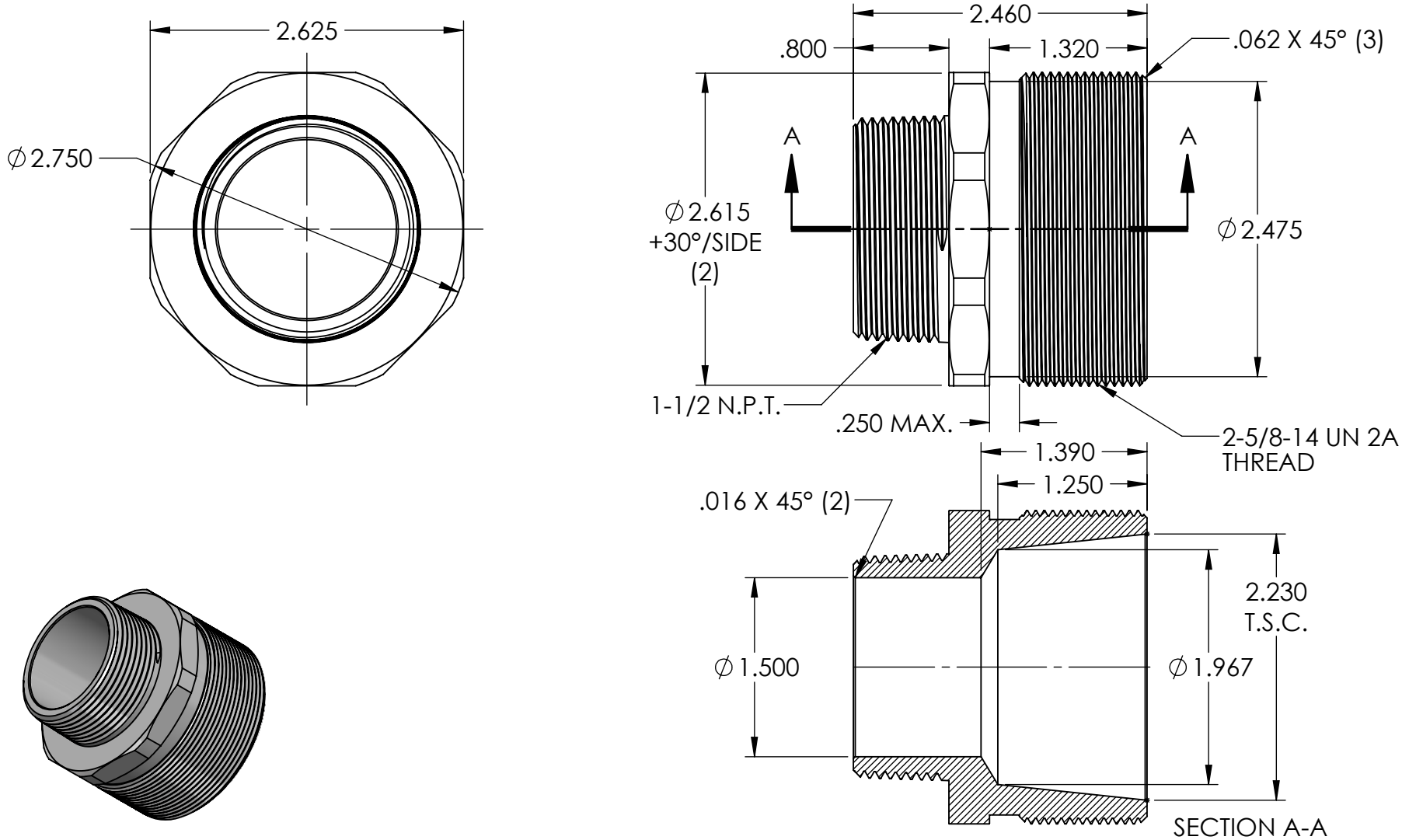

REV.	DATE	CHANGE
B	12/7/04	REDRAWN AND REDIMENSIONED AS MACHINED PART. PART WAS PREVIOUSLY SAND CASTED
C	1/5/05	Ø D 1.440 WAS 1.425, DIM "F" .690 WAS .80 AND DIM "A" 2.35 WAS 2.46 AND 59° WAS 45°
D	9/13/05	DIM "F" NOW .80" WAS .690" & "A" NOW 2.46 WAS 2.35"
E	8/24/09	DIM "D" NOW 1.500" WAS 1.440
F	1/8/15	REDRAWN

UNLESS OTHERWISE SPECIFIED:
DIMENSIONS ARE IN INCHES
TOLERANCES:
FRACTIONAL ± 1/64
ANGULAR: MACH ±1° BEND ±1°
ONE PLACE DECIMAL ±.015
TWO PLACE DECIMAL ±.010
THREE PLACE DECIMAL ±.005

INTERPRET GEOMETRIC TOLERANCING PER:

MATERIAL
ALUMINUM

FINISH

DO NOT SCALE DRAWING

	NAME	DATE
DRAWN	JCN	1/15
CHECKED		
ENG APPR.		
MFG APPR.		
Q.A.		

PROPRIETARY AND CONFIDENTIAL

THE INFORMATION CONTAINED IN THIS DRAWING IS THE SOLE PROPERTY OF REMKE INDUSTRIES. ANY REPRODUCTION IN PART OR AS A WHOLE WITHOUT THE WRITTEN PERMISSION OF REMKE INDUSTIRES IS PROHIBITED.

REMKE
REMKE INDUSTRIES
310 CHADDICK DR, WHEELING, IL. 60090

TITLE:

SIZE A

DWG. NO. RSR-5600-B

SCALE:

SHEET 1 OF 1

5 4 3 2 1

T:\Solidworks Files\Models and Drawings\Metals\Aluminum\BODYS\DRW\