FEATURES:

1. Material: Tin Plated CU
2. UL listed for U.S. & Canada.
3. Wire connector rated for 35Kv max.
4. Class B/C compressed, concentric, and compact copper conductor only.
5. Expanded wire range when installed with dieless NSi compression tool (N12ID).
6. Dimensions are for reference only, tolerance is +/- .06".

GL Series: GL3038

POLARIS®

PROGRAM:	SOLIDWORKS
UPDATED:	4/2022
SALES REV:	A
SIZE:	B (11x17)

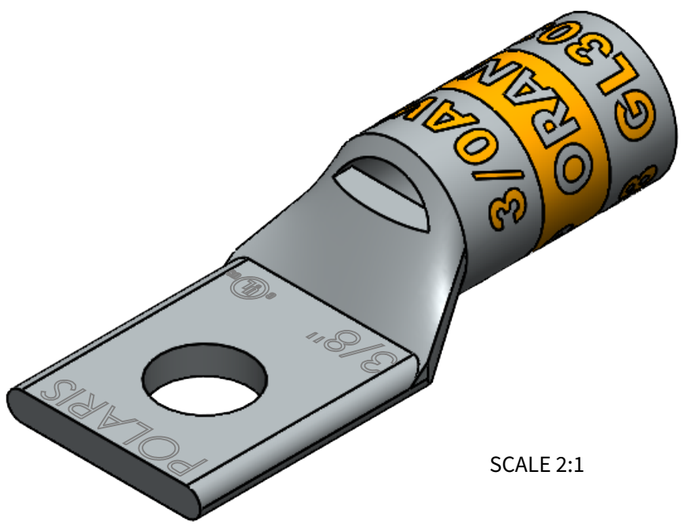

SCALE 2:1

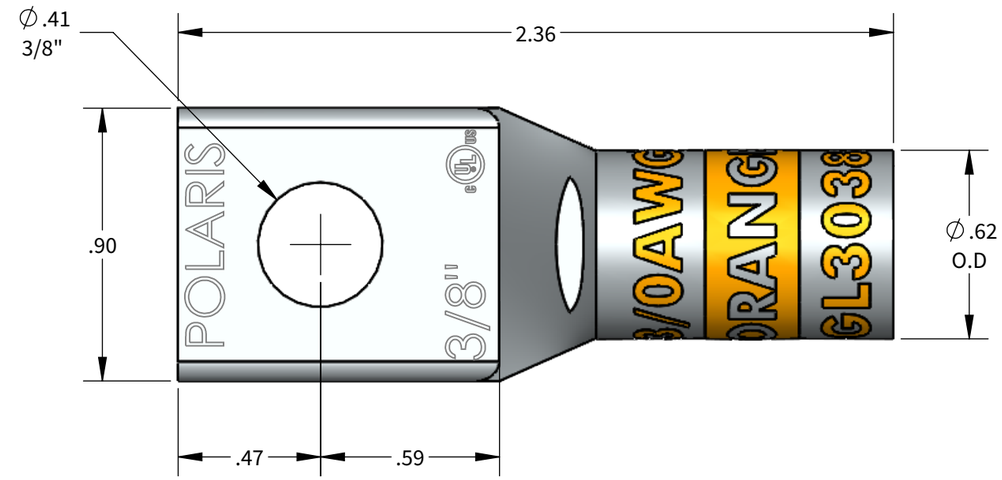

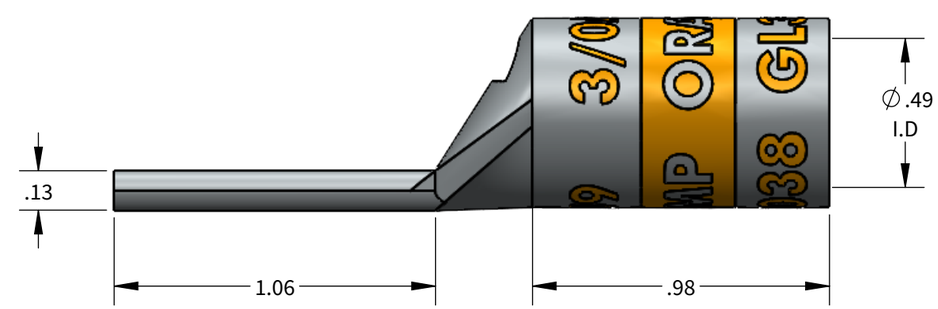

7

			COPPER COMPRESSION CONNECTOR TOOL AND DIE CHART (# OF CRIMPS)											
			NSI				GREENLEE		ILSCO	BURNDY	T&B	HUSKIE	
WIRE SIZE	STRIP LENGTH	DIE COLOR	EXPANDED WIRE RANGE W/N12ID	N1240 SERIES	NSI-12	NSI-12	1240 SERIES		ILC-12/ILC-15 SERIES	Y-35. Y750, PAT 750	TBM-15, TBM-14M	EP510C	
3/0AWG	1-1/16"	ORANGE	3/0AWG-#2AWG	KC12-3/0 (1)	CD10 (2)	HT41BA (2)	KC12-3/0 (1)	ILD-9 (2)	KC12-3/0 (1)	U27RT (1)	15530 (2)	HT41BA (2)	CD10 (2)