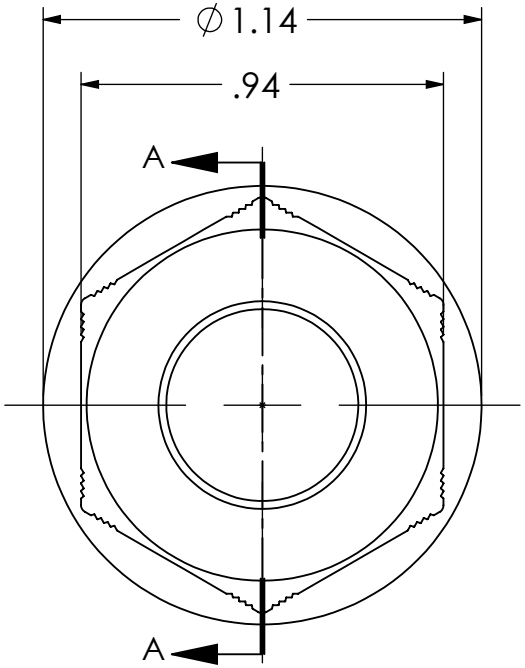

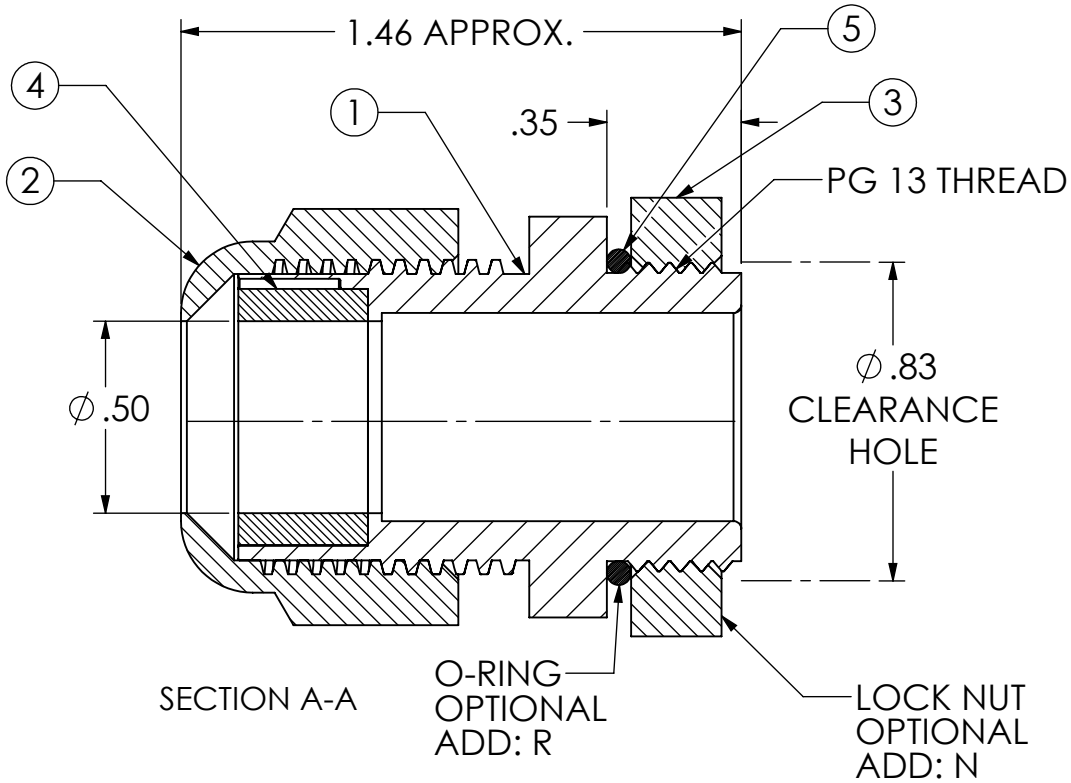

ITEM NO.	DESCRIPTION	MATERIAL	QTY.
1	BODY	POLYAMIDE	1
2	DOME CAP	POLYAMIDE	1
3	LOCKING NUT	POLYAMIDE	1
4	BUSHING	NEOPRENE	1
5	O-RING	BUNA N	1

RoHS COMPLIANT

CATALOG NUMBER	LOCKING NUT	CABLE RANGE
RD13AA	RLP13	.23 Ø - .47 Ø
RD13AR	RLP13	.19 Ø - .35 Ø

REV.	DATE	CHANGE
A	3/3/14	RELEASED DRAWING

UNLESS OTHERWISE SPECIFIED:
DIMENSIONS ARE IN INCHES
TOLERANCES:
FRACTIONAL ± 1/64
ANGULAR: MACH ±1° BEND ±1°
ONE PLACE DECIMAL ±.015
TWO PLACE DECIMAL ±.010
THREE PLACE DECIMAL ±.005

INTERPRET GEOMETRIC TOLERANCING PER:

MATERIAL AS NOTED

FINISH NATURAL

DO NOT SCALE DRAWING

	NAME	DATE
DRAWN	JCN	3/14
CHECKED		
ENG APPR.		
MFG APPR.		
Q.A.		

PROPRIETARY AND CONFIDENTIAL

THE INFORMATION CONTAINED IN THIS DRAWING IS THE SOLE PROPERTY OF REMKE INDUSTRIES. ANY REPRODUCTION IN PART OR AS A WHOLE WITHOUT THE WRITTEN PERMISSION OF REMKE INDUSTIRES IS PROHIBITED.

REMKE
REMKE INDUSTRIES
310 CHADDICK DR, WHEELING, IL. 60090

TITLE:
DOME CAP

SIZE A

DWG. NO. RD13 PG SERIES

SCALE: 2:1

SHEET 1 OF 1

5 4 3 2 1