BRIDGEPORT
13235 Reese Boulevard West
Huntersville, NC 28078
800.321.5847

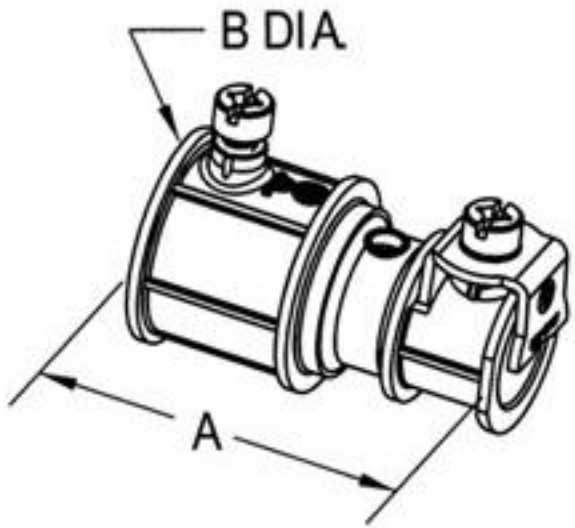

NAME	DIMENSION A (INCHES)	DIMENSION B (INCHES)	DIMENSION C (INCHES)
Mighty-Merge® Transition Fittings. EMT to 14/2 - 10/3 AC/MC/FMC Coupling	2.12	1.19	-
SKU	**DIMENSION D (INCHES)**	**DIMENSION E (INCHES)**	**DIMENSION F (INCHES)**
4057-DC	-	-	-

©2023 NSI Industries
BPT_ProDraw_1223