BRIDGEPORT
13235 Reese Boulevard West
Huntersville, NC 28078
800.321.5847

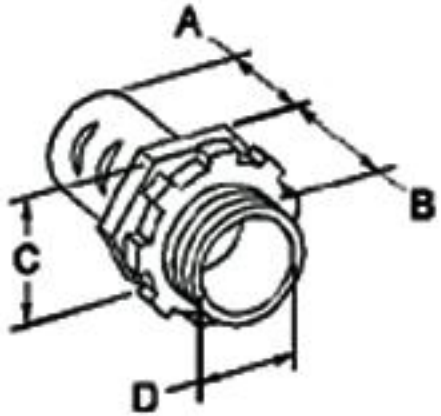

NAME	DIMENSION A (INCHES)	DIMENSION B (INCHES)	DIMENSION C (INCHES)
Connector, Screw-In, Zinc Die Cast, 105 DegreeC Insulated Throat, Flex Size 3/4 Inch	1.12	0.50	1.12
SKU	**DIMENSION D (INCHES)**	**DIMENSION E (INCHES)**	**DIMENSION F (INCHES)**
521-DCI2	0.72	-	-

©2023 NSI Industries
BPT_ProDraw_1223