Muller Outdoor , 2-Light, 14", Matte Black

ITEM N°
28055-013

EUROfase

JOB NAME: DATE: TYPE:

COMMENTS:

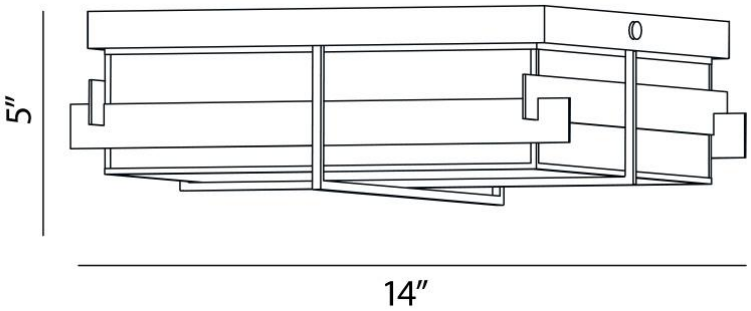

LIGHT INFORMATION

Light Type	Bulb
Bulb Socket	E26
Bulb Shape	T10
Number of Lights	2
Light Direction	Down
Dimming Method	Triac/Elv
Current Type	AC
Input Voltage	120
Total Wattage	120

DIMENSIONS & WEIGHT

Length (In)	14
Width (In)	14
Height (In)	5
Weight (Lbs)	10.29

INSTALLATION

Rating	Wet
Hanging Support Type	J-Box

PRODUCT FINISH

Matte Black

CERTIFICATIONS & COMPLIANCE

COPYRIGHT © EUROFASE LTD.