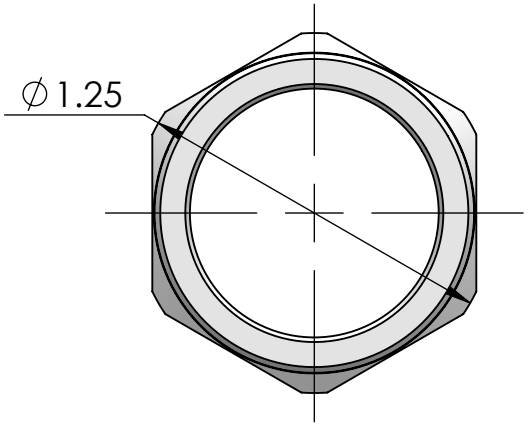

NUT

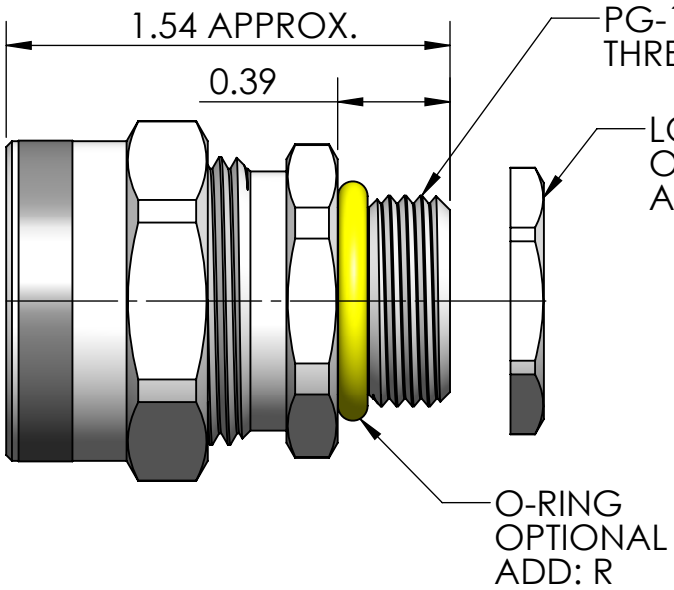

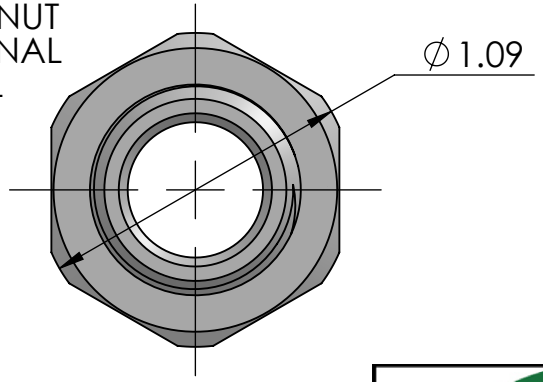

BODY

RoHS COMPLIANT

ITEM NO.	PART NUMBER	DESCRIPTION	MATERIAL	QTY.
1	RPG-11100-B	BODY	ALUMINUM	1
2	SRB-103 THRU SRB-110	BUSHING	NEOPRENE	1
3	RSR-100-NB	NUT	ALUMINIUM	1
4	SW-100	WASHER	C.R.S. ZINC PLATED	1
5	SOR-38	O-RING	BUNA-N	1
6	RLP11-BR	LOCK NUT	BRASS, NICKEL PLATED	1

PART NUMBER	SEALING RANGE	BODY BORE
RPG-11103	.125 - .188	.470
RPG-11104	.188 - .250	.470
RPG-11105	.250 - .312	.470
RPG-11106	.312 - .375	.470
RPG-11107	.375 - .438	.470
RPG-11108	.438 - .500	.470
RPG-11109	.500 - .562	.470
RPG-11110	.562 - .625	.470

REV.	DATE	CHANGE
A	6/10/13	DRAWING RELEASED

UNLESS OTHERWISE SPECIFIED:
DIMENSIONS ARE IN INCHES
TOLERANCES:
FRACTIONAL ± 1/64
ANGULAR: MACH ±1° BEND ±1°
ONE PLACE DECIMAL ±.015
TWO PLACE DECIMAL ±.010
THREE PLACE DECIMAL ±.005

INTERPRET GEOMETRIC TOLERANCING PER:

MATERIAL ALUMINUM

FINISH

DO NOT SCALE DRAWING

	NAME	DATE
DRAWN	JCN	6/13
CHECKED		
ENG APPR.		
MFG APPR.		
Q.A.		

PROPRIETARY AND CONFIDENTIAL

THE INFORMATION CONTAINED IN THIS DRAWING IS THE SOLE PROPERTY OF REMKE INDUSTRIES. ANY REPRODUCTION IN PART OR AS A WHOLE WITHOUT THE WRITTEN PERMISSION OF REMKE INDUSTIRES IS PROHIBITED.

REMKE
REMKE INDUSTRIES
310 CHADDICK DR, WHEELING, IL. 60090

TITLE: RPG-11100 SERIES

SIZE A

DWG. NO. RPG-11100 ASSEMBLY

SCALE: 1.5:1

SHEET 1 OF 1

5 4 3 2 1