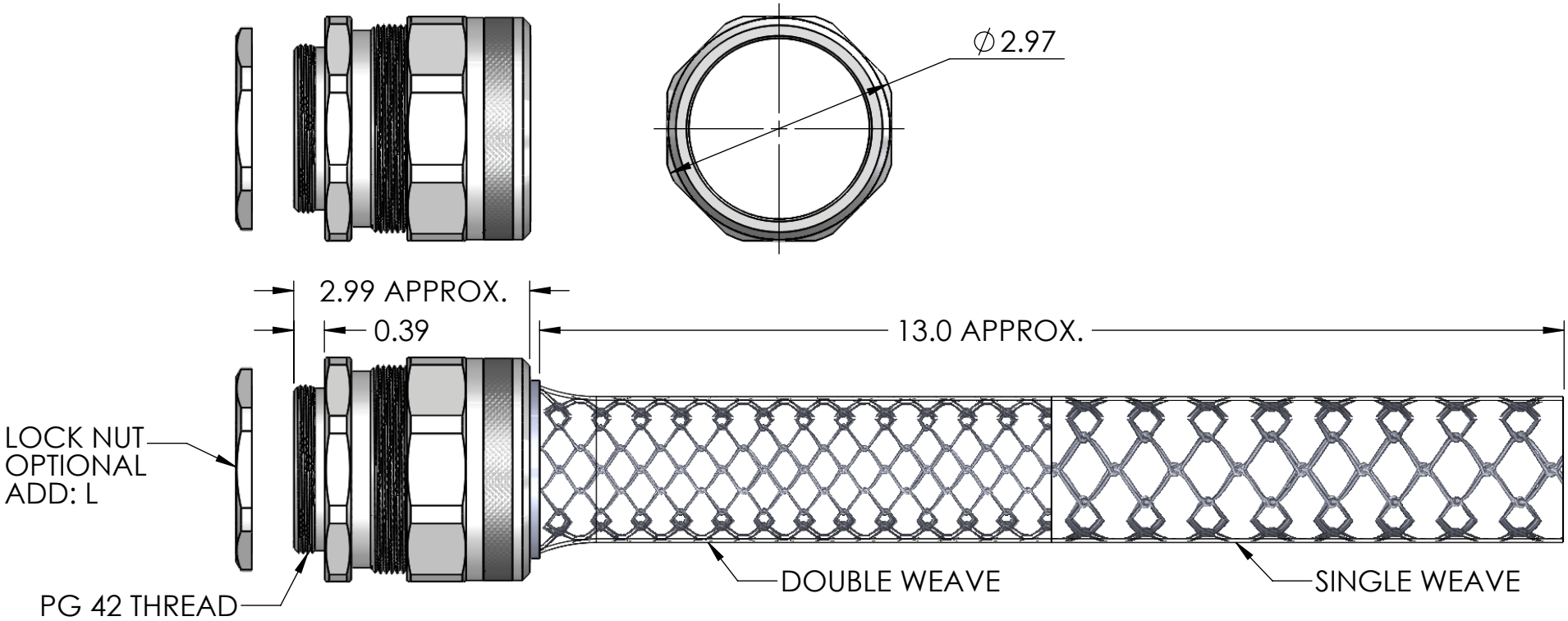

ITEM NO.	PART NUMBER	DESCRIPTION	MATERIAL	QTY.
1	RPG-42600-B	BODY	ALUMINUM	1
2	SRB-629	BUSHING	NEOPRENE	1
3	RSR-600-ND	NUT	ALUMINUM	1
4	RLP42-BR	LOCK NUT	BRASS, NICKLE PLATED	1
5	R-629-D	MESH	STAINLESS WIRE	1

RoHS COMPLIANT

CATALOG NUMBER	SEALING RANGE	BODY BORE
RPG-42629-E	1.688 - 1.812	1.790

REV.	DATE	CHANGE
A	8/8/13	DRAWING RELEASED

UNLESS OTHERWISE SPECIFIED:
DIMENSIONS ARE IN INCHES
TOLERANCES:
FRACTIONAL ± 1/64
ANGULAR: MACH ±1° BEND ±1°
ONE PLACE DECIMAL ±.015
TWO PLACE DECIMAL ±.010
THREE PLACE DECIMAL ±.005

INTERPRET GEOMETRIC TOLERANCING PER:

MATERIAL ALUMINUM

FINISH

DO NOT SCALE DRAWING

	NAME	DATE
DRAWN	JCN	8/13
CHECKED		
ENG APPR.		
MFG APPR.		
Q.A.		

PROPRIETARY AND CONFIDENTIAL

THE INFORMATION CONTAINED IN THIS DRAWING IS THE SOLE PROPERTY OF REMKE INDUSTRIES. ANY REPRODUCTION IN PART OR AS A WHOLE WITHOUT THE WRITTEN PERMISSION OF REMKE INDUSTIRES IS PROHIBITED.

BRIDGEPORT

TITLE: RPG-42629-E SERIES

SIZE A

DWG. NO. RPG-42629-E ASSEMBLY

SCALE: 1:2

SHEET 1 OF 1

5 4 3 2 1