BRIDGEPORT
13235 Reese Boulevard West
Huntersville, NC 28078
800.321.5847

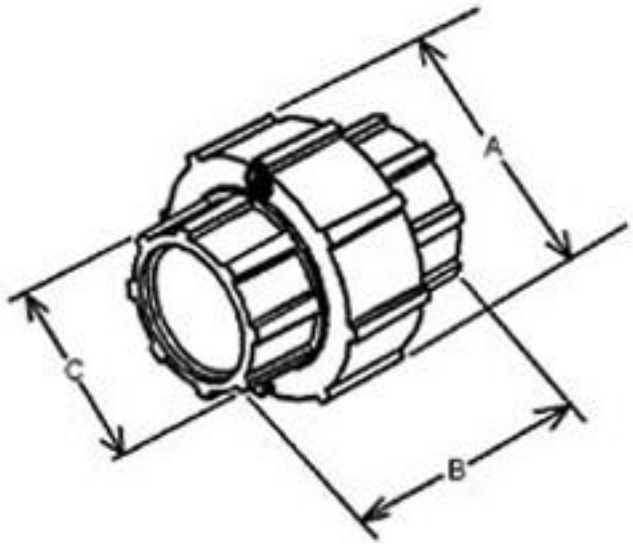

NAME	DIMENSION A (INCHES)	DIMENSION B (INCHES)	DIMENSION C (INCHES)
3 Mighty-Align® Raintight 3 Piece Self Aligning Raintight Coupling	5.25	3.75	4.00
SKU	**DIMENSION D (INCHES)**	**DIMENSION E (INCHES)**	**DIMENSION F (INCHES)**
1128-RT	-	-	-

©2023 NSI Industries
BPT_ProDraw_1223