FULL MOTION DUAL STUD MOUNT

PDX680

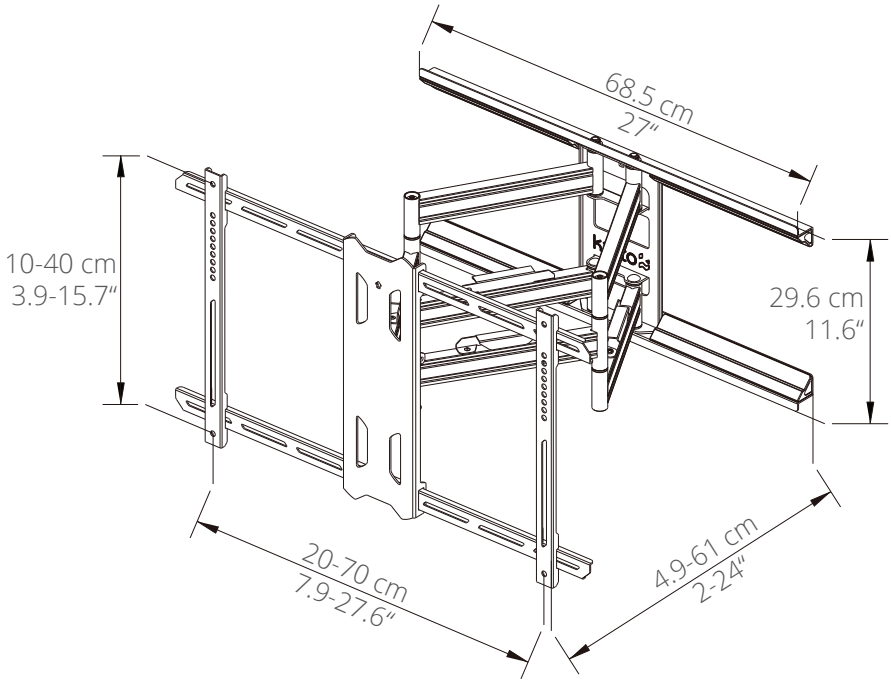

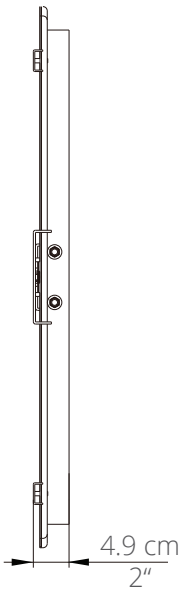

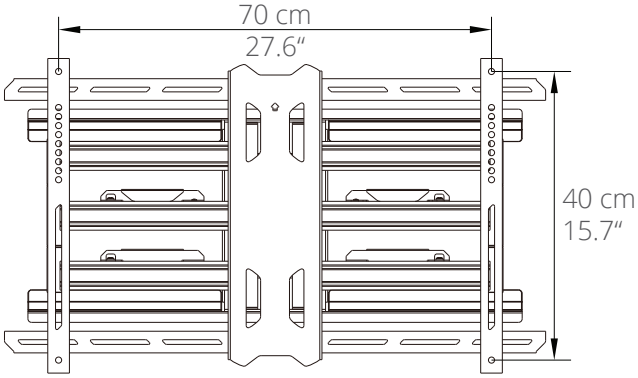

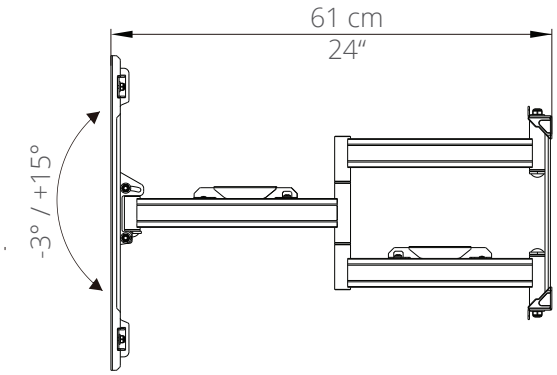

kanto
kantomounts.com