ITEM NO.	PART NUMBER	MATERIAL	DESCRIPTION	QTY.
1	48311		MOTOR 7.5kW 4POLE-MEC132-H/SHAFT24mm	1
2	48959		DOL STARTER MSI-12D 400V 50Hz 14-17A	1
3	48417/G		NYLON CABLE GLAND BLACK 20mm	2
4	70365/A		HO5VV-F 4G x 2.5mm² PVC BLACK CABLE-760mm -5 CONNECT.	1
5	70507/A		HO5VV-F 4G x 2.5mm² PVC BLACK CABLE COMPLETE-5000mm	1
6	70469		4P 20A INDUSTRIAL 3 PHASE PLUG TOP-WITH GLAND	1

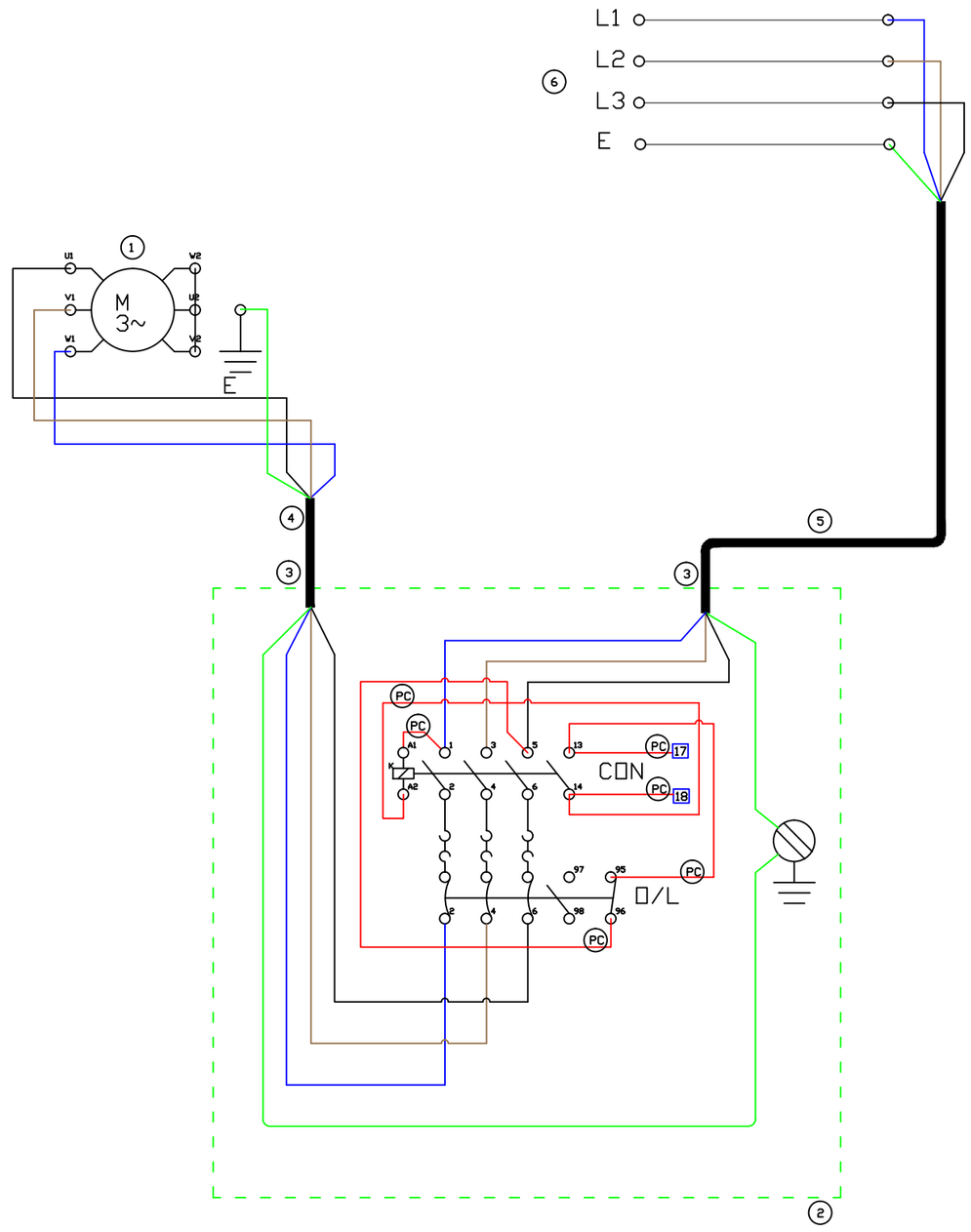

CON - CONTACTOR
O/L - OVERLOAD
S - SWITCH
M - MOTOR
PC - PRE CONNECTED
W - WHITE
BK - BLACK
BL - BLUE
BN - BROWN
RD - RED
GN - GREEN
YL - YELLOW

RELAY OVERLOAD SETTINGS

Set at 17 AMPS
Set to MANUAL

Note	Material	QTY	
	Time of production	Atot	

APPROVED		
DATE	18/08/2016	
DWN	D.N.	

SPITWATER® AUSTRALIA

Description
WIRING DIAGRAM FOR SCW54
HP201S 3000PSI 21L/M 10HP 3PH
415V/50Hz

Sheet 1 of 1 sheet

Part number
SCW54-WIRING DIAGRAM