BRIDGEPORT
13235 Reese Boulevard West
Huntersville, NC 28078
800.321.5847

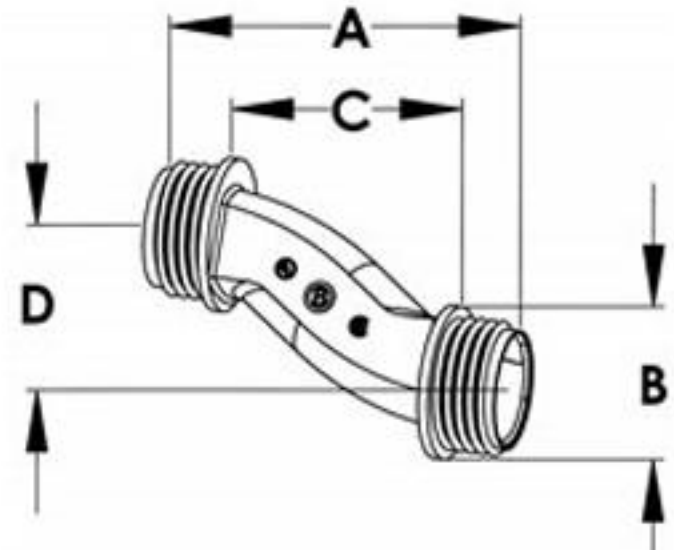

NAME	DIMENSION A (INCHES)	DIMENSION B (INCHES)	DIMENSION C (INCHES)
Nipple, Offset, Zinc Die Cast, Size 1 1/2 Inch	3.06	2.09	1.62
SKU	**DIMENSION D (INCHES)**	**DIMENSION E (INCHES)**	**DIMENSION F (INCHES)**
1524-DC	0.75	-	-

©2023 NSI Industries
BPT_ProDraw_1223