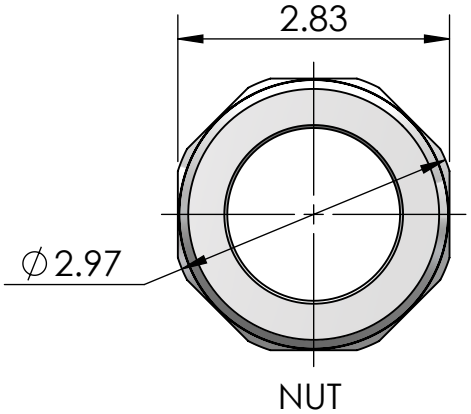

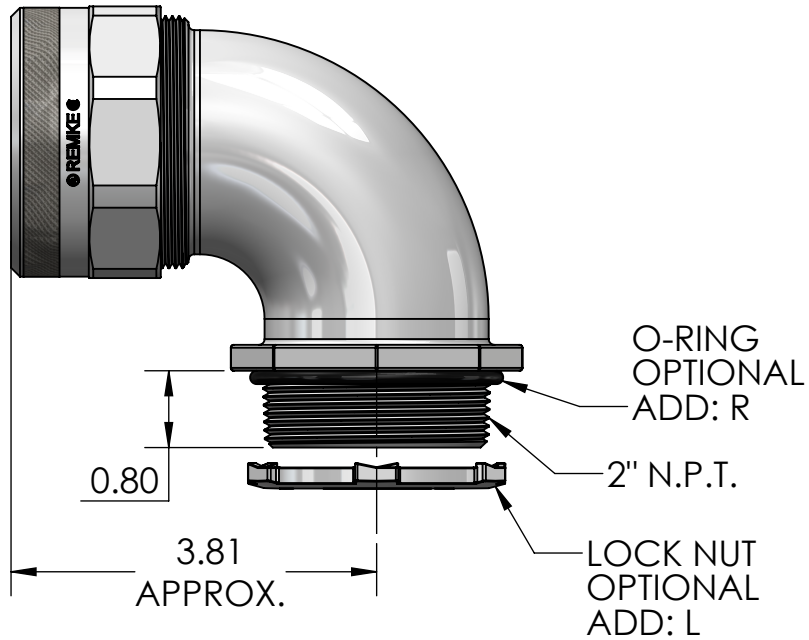

RoHS COMPLIANT

ITEM NO.	PART NUMBER	DESCRIPTION	MATERIAL	QTY.
1	RSR-9600-B	BODY	ALUMINUM	1
2	SRB-620 THRU SRB-629	BUSHING	NEOPRENE	1
3	SW-600	WASHER	C.R.S. ZINC PLATED	1
4	RSR-600-N	NUT	ALUMINIUM	1
5	WH-5-R	O-RING	ADD: R, BUNA-N	1
6	LN-200	LOCKNUT	ADD: L, ZINC-PLATED STEEL	1

CATALOG NUMBER	SEALING RANGE	BODY BORE
RSR-9620	1.125 - 1.250	1.89
RSR-9622	1.250 - 1.375	1.89
RSR-9625	1.438 - 1.562	1.89
RSR-9627	1.562 - 1.688	1.89
RSR-9629	1.688 - 1.812	1.89

REV.	DATE	CHANGE
A	5/06/13	DRAWING RELEASED

UNLESS OTHERWISE SPECIFIED:
DIMENSIONS ARE IN INCHES
TOLERANCES:
FRACTIONAL ± 1/64
ANGULAR: MACH ±1° BEND ±1°
ONE PLACE DECIMAL ±.030
TWO PLACE DECIMAL ±.020
THREE PLACE DECIMAL ±.010

INTERPRET GEOMETRIC TOLERANCING PER:

MATERIAL

FINISH

DO NOT SCALE DRAWING

	NAME	DATE
DRAWN	JCN	5/13
CHECKED		
ENG APPR.		
MFG APPR.		
Q.A.		

PROPRIETARY AND CONFIDENTIAL

THE INFORMATION CONTAINED IN THIS DRAWING IS THE SOLE PROPERTY OF REMKE INDUSTRIES. ANY REPRODUCTION IN PART OR AS A WHOLE WITHOUT THE WRITTEN PERMISSION OF REMKE INDUSTIRES IS PROHIBITED.

REMKE
REMKE INDUSTRIES
310 CHADDICK DR, WHEELING, IL. 60090

TITLE:
RSR-9600 - 90° SERIES

SIZE **A**
DWG. NO. RSR-9600 90 DEGREE ASSEMBLY

SCALE: 1:2
SHEET 1 OF 1

5 4 3 2 1

T:\SOLIDWORKS FILES\Assymblies (Customer Drawings)\ALUM\RSR ASSEMBLYS\DRW\