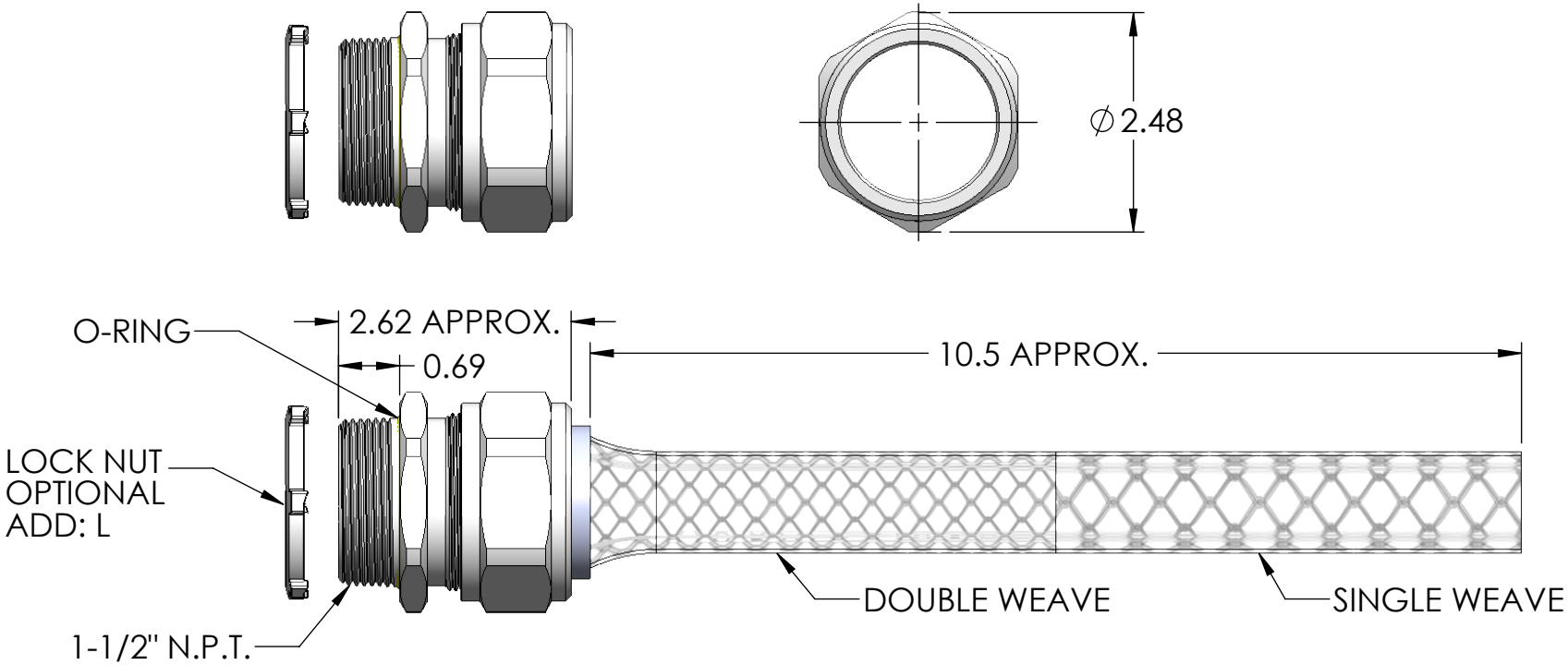

ITEM NO.	PART NUMBER	DESCRIPTION	MATERIAL	QTY.
1	RSSS-500-B	BODY	304 STAINLESS	1
2	SRB-518	BUSHING	NEOPRENE	1
3	SOR-51	O-RING	BUNA-N	1
4	RSSS-500-ND	NUT	304 STAINLESS	1
5	LN-150	LOCK NUT	ADD: L, C.R.S. ZINC PLATED	1
6	R-518-DSS	MESH	ALL STAINLESS	1

RoHS COMPLIANT

CATALOG NUMBER	SEALING RANGE	BODY BORE
RSSS-518-E	1.000 - 1.125	1.438

REV.	DATE	CHANGE
A	7/18/13	DRAWING RELEASED

UNLESS OTHERWISE SPECIFIED:
DIMENSIONS ARE IN INCHES
TOLERANCES:
FRACTIONAL ± 1/64
ANGULAR: MACH ±1° BEND ±1°
ONE PLACE DECIMAL ±.015
TWO PLACE DECIMAL ±.010
THREE PLACE DECIMAL ±.005

INTERPRET GEOMETRIC TOLERANCING PER:

MATERIAL STAINLESS

FINISH

DO NOT SCALE DRAWING

	NAME	DATE
DRAWN	JCN	7/13
CHECKED		
ENG APPR.		
MFG APPR.		
Q.A.		

PROPRIETARY AND CONFIDENTIAL

THE INFORMATION CONTAINED IN THIS DRAWING IS THE SOLE PROPERTY OF REMKE INDUSTRIES. ANY REPRODUCTION IN PART OR AS A WHOLE WITHOUT THE WRITTEN PERMISSION OF REMKE INDUSTIRES IS PROHIBITED.

BRIDGEPORT

TITLE: RSSS-518-E SERIES

SIZE A

DWG. NO. RSSS-518-E ASSEMBLY

SCALE: 1:2

SHEET 1 OF 1

5 4 3 2 1