DIMENSIONS

A	2.622
C	1.000
D	0.812
F	0.312
G	2.460
H	2.925
J	.170 WALL
K	1.450 I.D.
L	2.175
M	2.240
N	.093

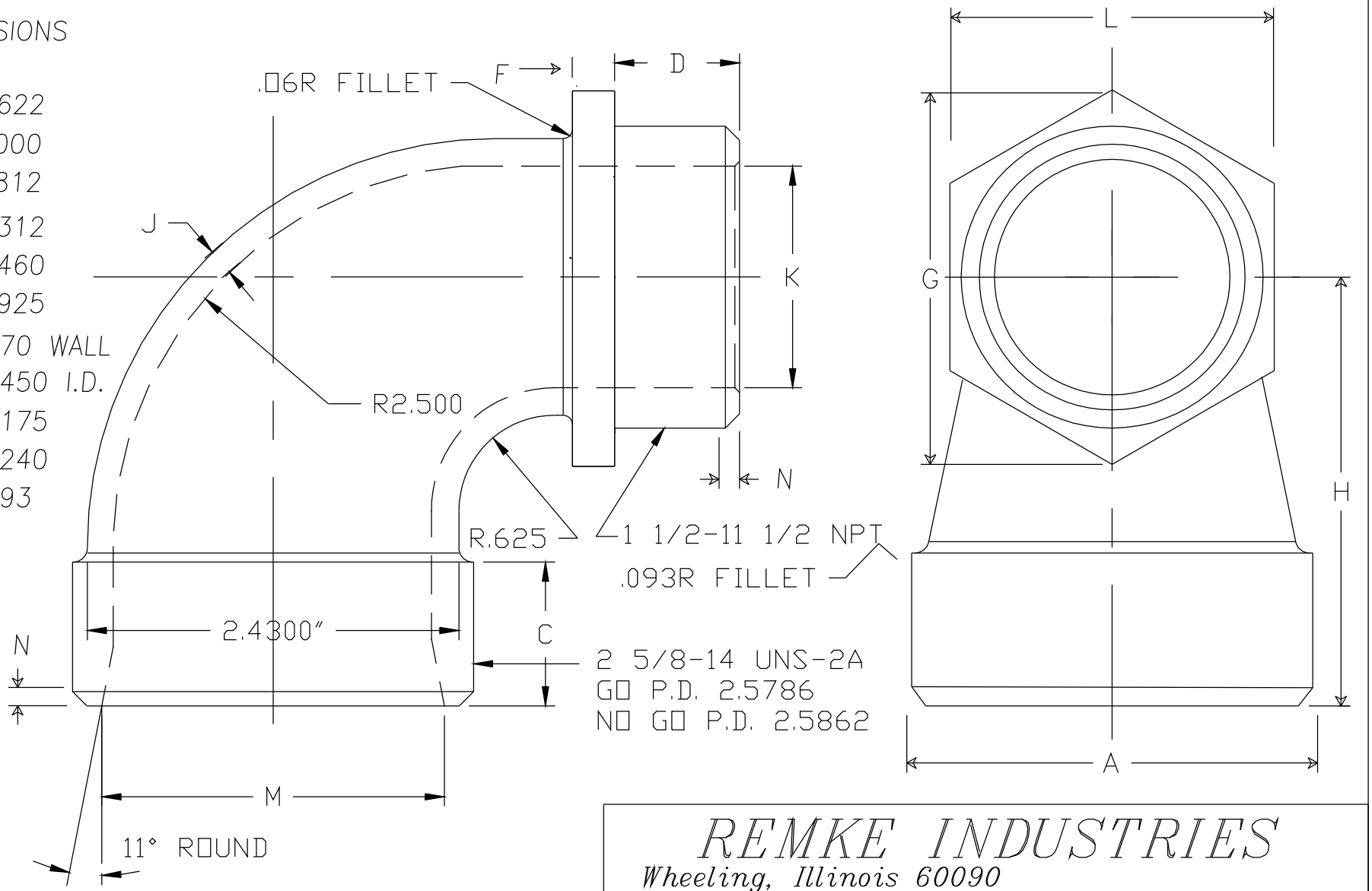

NOTE: NO SHARP CORNERS – PARTICULARY AT BORE H. ALL CHAMFERS ARE 45 DEGREES

TOLERANCE +/- .005 +/- ONE DEGREE

REV. A 2-12-96

REV. B 3-12-96 ADD DIM. L,M,N,O & ADD WALL DIM.

REV. C 6/5/00 ADDED THREAD DESIGNATIONS.

REMKE INDUSTRIES

Wheeling, Illinois 60090

SCALE:	APPROX FULL
MATERIAL:	ALUM SAND CASTING
FINISH:	NATURAL
PART NAME:	BODY 90 DEG. MACHINED
PART NUMBER:	RSR-9601-B
DRAWING DATE:	6/5/00