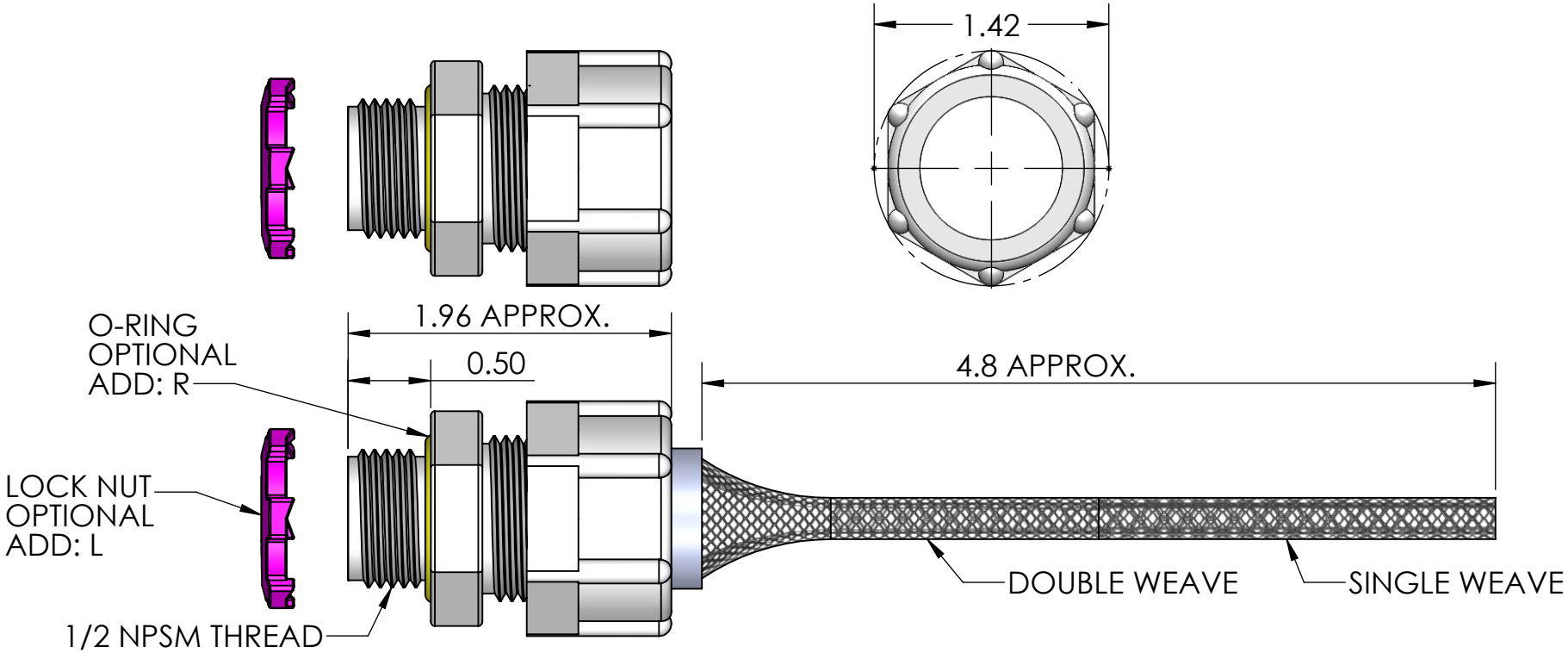

ITEM NO.	PART NUMBER	DESCRIPTION	MATERIAL	QTY.
1	RSP-100-B	BODY	NYLON 6/6	1
2	SRB-103 - SRB-104	BUSHING	NEOPRENE	1
3	SOR-1-VNT	O-RING	BUNA-N	1
4	RSP-100-ND	NUT	NYLON 6/6	1
5	LN-50	LOCK NUT	ADD: L, C.R.S. ZINC PLATED	1
6	R-104-D	MESH	STAINLESS WIRE	1

CATALOG NUMBER	SEALING RANGE	BODY BORE
RSP-103-E	.125 - .188	.570
RSP-104-E	.188 - .250	.570

REV.	DATE	CHANGE
A	7/24/13	DRAWING RELEASED

UNLESS OTHERWISE SPECIFIED:
DIMENSIONS ARE IN INCHES
TOLERANCES:
FRACTIONAL ± 1/64
ANGULAR: MACH ±1° BEND ±1°
ONE PLACE DECIMAL ±.015
TWO PLACE DECIMAL ±.010
THREE PLACE DECIMAL ±.005

INTERPRET GEOMETRIC TOLERANCING PER:

MATERIAL PLASTIC

FINISH

DO NOT SCALE DRAWING

	NAME	DATE
DRAWN	JCN	7/13
CHECKED		
ENG APPR.		
MFG APPR.		
Q.A.		

PROPRIETARY AND CONFIDENTIAL

THE INFORMATION CONTAINED IN THIS DRAWING IS THE SOLE PROPERTY OF REMKE INDUSTRIES. ANY REPRODUCTION IN PART OR AS A WHOLE WITHOUT THE WRITTEN PERMISSION OF REMKE INDUSTIRES IS PROHIBITED.

REMKE
REMKE INDUSTRIES
310 CHADDICK DR, WHEELING, IL. 60090

TITLE:
RSP-103-104-E SERIES

SIZE A

DWG. NO. RSP-103-104-E ASSEMBLY

SCALE: 1:1

SHEET 1 OF 1

5 4 3 2 1