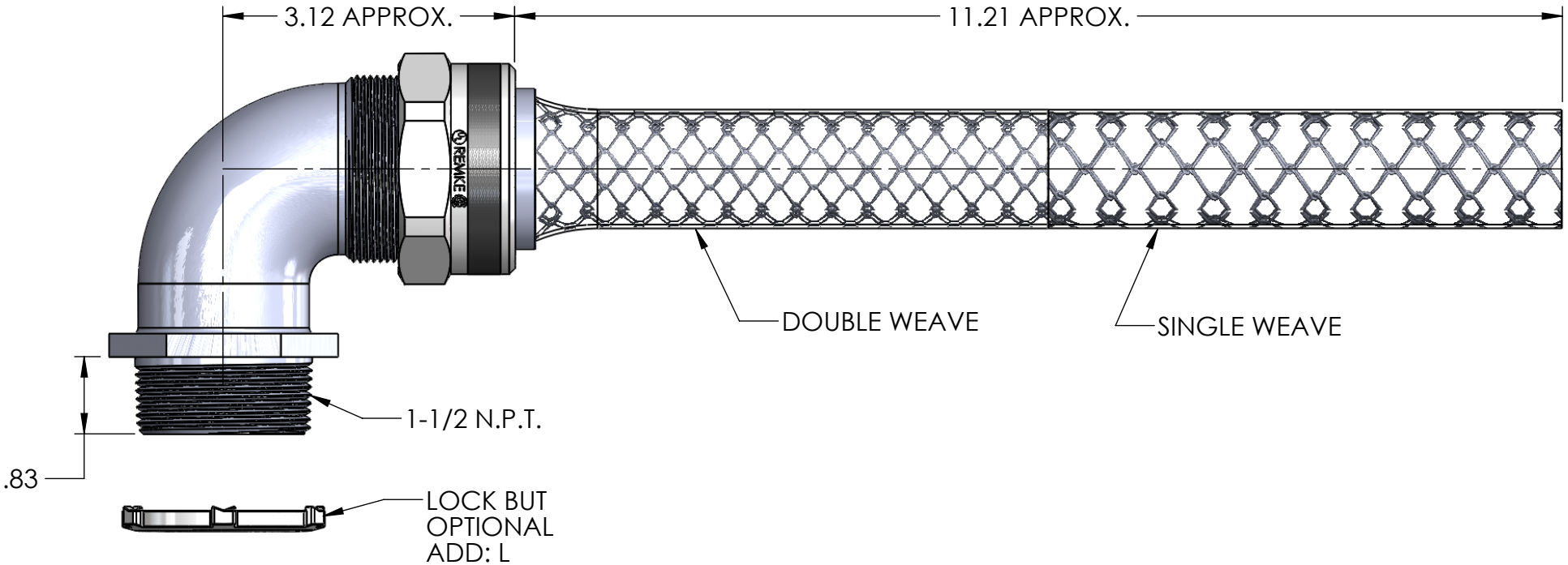


| ITEM NO. | PART NUMBER | DESCRIPTION | MATERIAL | QTY. |
|---|---|---|---|---|
| 1 | RSR-9500-B | BODY | ALUMINUM | 1 |
| 2 | SRB-520 | BUSHING | NEOPRENE | 1 |
| 3 | RSR-500-ND | NUT | ALUMINUM | 1 |
| 4 | LN-125 | LOCK NUT | ADD:L, C.R.S. ZINC PLATED | 1 |
| 5 | R-520-D | MESH | STAINLESS WIRE | 1 |

RoHS COMPLIANT

| CATALOG NUMBER | SEALING RANGE | BODY BORE |
|---|---|---|
| RSR-9520-E | 1.125 - 1.250 | 1.450 |

| REV. | DATE | CHANGE |
|---|---|---|
| A | 4/22/15 | DRAWING RELEASED |

UNLESS OTHERWISE SPECIFIED:
DIMENSIONS ARE IN INCHES
TOLERANCES:
FRACTIONAL ± 1/64
ANGULAR: MACH ±1° BEND ±1°
ONE PLACE DECIMAL ±.015
TWO PLACE DECIMAL ±.010
THREE PLACE DECIMAL ±.005

INTERPRET GEOMETRIC TOLERANCING PER:

MATERIAL

FINISH

DO NOT SCALE DRAWING

| | NAME | DATE |
|---|---|---|
| DRAWN | JCN | 4/15 |
| CHECKED | | |
| ENG APPR. | | |
| MFG APPR. | | |
| Q.A. | | |

**PROPRIETARY AND CONFIDENTIAL**

THE INFORMATION CONTAINED IN THIS DRAWING IS THE SOLE PROPERTY OF REMKE INDUSTRIES. ANY REPRODUCTION IN PART OR AS A WHOLE WITHOUT THE WRITTEN PERMISSION OF REMKE INDUSTIRES IS PROHIBITED.

REMKE
REMKE INDUSTRIES
310 CHADDICK DR, WHEELING, IL. 60090

TITLE:
RSR-9520-E SERIES

SIZE A
DWG. NO. RSR-9520-E 90 DEGREE ASSEMBLY

SCALE 0.6:1
SHEET 1 OF 1

5 4 3 2 1

T:\Solidworks Files\Assymblies (Customer Drawings)\ALUM\MESH ASSEMBLYS\DRW\