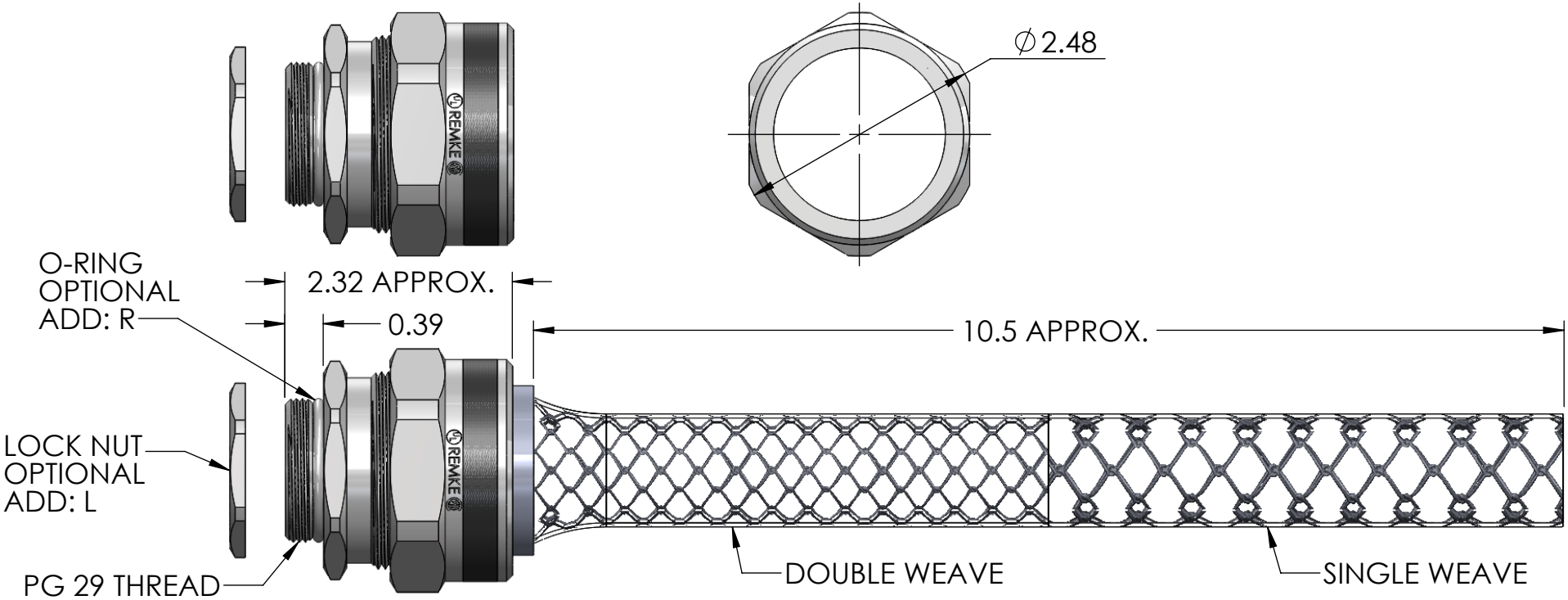

ITEM NO.	PART NUMBER	DESCRIPTION	MATERIAL	QTY.
1	RPG-29350-B	BODY	ALUMINUM	1
2	SRB-518	BUSHING	NEOPRENE	1
3	SOR-3	O-RING	BUNA-N	1
4	RSR-500-ND	NUT	ALUMINUM	1
5	RLP29-BR	LOCK NUT	BRASS, NICKLE PLATED	1
6	R-518-D	MESH	STAINLESS WIRE	1

RoHS COMPLIANT

CATALOG NUMBER	SEALING RANGE	BODY BORE
RPG-29518-E	1.000 - 1.125	1.220

REV.	DATE	CHANGE
A	8/7/13	DRAWING RELEASED

UNLESS OTHERWISE SPECIFIED:
DIMENSIONS ARE IN INCHES
TOLERANCES:
FRACTIONAL ± 1/64
ANGULAR: MACH ±1° BEND ±1°
ONE PLACE DECIMAL ±.015
TWO PLACE DECIMAL ±.010
THREE PLACE DECIMAL ±.005

INTERPRET GEOMETRIC TOLERANCING PER:

MATERIAL ALUMINUM

FINISH

DO NOT SCALE DRAWING

	NAME	DATE
DRAWN	JCN	8/13
CHECKED		
ENG APPR.		
MFG APPR.		
Q.A.		

PROPRIETARY AND CONFIDENTIAL

THE INFORMATION CONTAINED IN THIS DRAWING IS THE SOLE PROPERTY OF REMKE INDUSTRIES. ANY REPRODUCTION IN PART OR AS A WHOLE WITHOUT THE WRITTEN PERMISSION OF REMKE INDUSTIRES IS PROHIBITED.

REMKE
REMKE INDUSTRIES
310 CHADDICK DR, WHEELING, IL. 60090

TITLE:
RPG-29518-E SERIES

SIZE **A**
DWG. NO. RPG-29518-E ASSEMBLY

SCALE:1:1.6 SHEET 1 OF 1

5 4 3 2 1