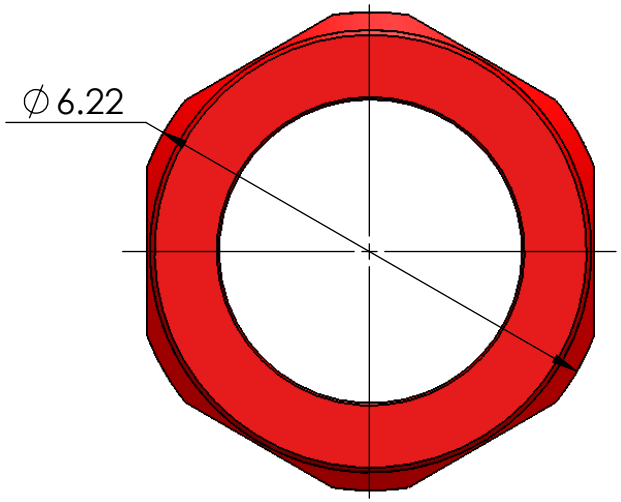

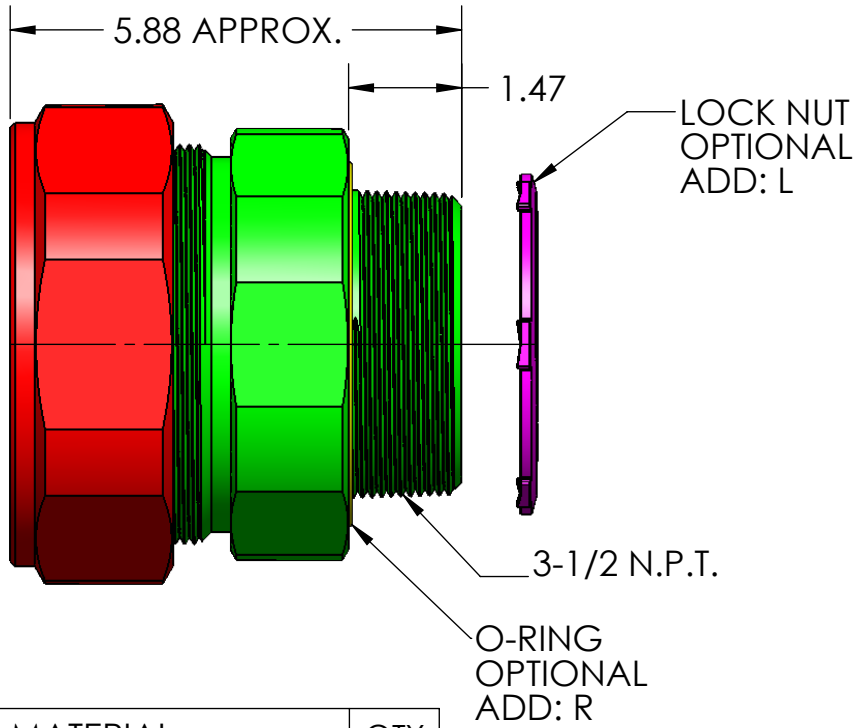

ITEM NO.	PART NUMBER	DESCRIPTION	MATERIAL	QTY
1	RSR-1150-B	BODY	ALUMINUM	1
2	SRB-1101-SRB-1103	BUSHING	NEOPRENE	1
3	SW-1100	WASHER	NYLON	1
4	TK-1100-N SERIES	NUT	ALUMINUM	1
5	LN-350	LOCK NUT	ADD: L, C.R.S. ZINC PLATED	1
6	0-100165	O-RING	BUNA-N	1

RoHS COMPLIANT

PART NUMBER	SEALING RANGE	BODY BORE
RSR-1151	3.005 - 3.180	3.250
RSR-1152	3.180 - 3.335	3.250
RSR-1153	3.335 - 3.530	3.250

REV.	DATE	CHANGE
A	11/20/14	DRAWING RELEASED

UNLESS OTHERWISE SPECIFIED:
DIMENSIONS ARE IN INCHES
TOLERANCES:
FRACTIONAL ± 1/64
ANGULAR: MACH ±1° BEND ±1°
ONE PLACE DECIMAL ±.015
TWO PLACE DECIMAL ±.010
THREE PLACE DECIMAL ±.005

INTERPRET GEOMETRIC TOLERANCING PER:

MATERIAL ALUMINUM

FINISH

DO NOT SCALE DRAWING

	NAME	DATE
DRAWN	JCN	11/14
CHECKED		
ENG APPR.		
MFG APPR.		
Q.A.		

PROPRIETARY AND CONFIDENTIAL

THE INFORMATION CONTAINED IN THIS DRAWING IS THE SOLE PROPERTY OF REMKE INDUSTRIES. ANY REPRODUCTION IN PART OR AS A WHOLE WITHOUT THE WRITTEN PERMISSION OF REMKE INDUSTIRES IS PROHIBITED.

REMKE
REMKE INDUSTRIES
310 CHADDICK DR, WHEELING, IL. 60090

TITLE:
RSR-1150 SERIES

SIZE A
DWG. NO. RSR-1150 ASSEMBLY

SCALE: 0.4:1
SHEET 1 OF 1

5 4 3 2 1

T:\Solidworks Files\Assymblies (Customer Drawings)\ALUM\RSR ASSEMBLYS\DRW\