SEALED UNIT PARTS CO., INC.
PO Box 21, 2230 Landmark Place
Allenwood, NJ 08720 USA
www.supco.com

MINI-SPLIT ACCESSORIES

RUN CAPACITORS, MOUNTING BRACKETS & CONDENSATE PUMPS

Mini-Split Run Capacitors

- Plastic construction
- Quad blade quick connect to terminals
- Tolerance: +/- 5%
- Operating temperature: -13°F to 185°F (-25°C to 85°C)
- Meets IEC 252 standard
- Life tested to 120% of rated voltage at 85°C for 1,000 hours
- Cycle tested at 140% of rated voltage at 85°C for 100,000 cycles
- UL® recognized

PART NO.	DESCRIPTION
RC1X450	Mini-Split Run Cap 1MFD 450V
RC1.5X450	Mini-Split Run Cap 1.5MFD 450V
RC2X450	Mini-Split Run Cap 2MFD 450V
RC2.5X450	Mini-Split Run Cap 2.5MFD 450V
RC3X450	Mini-Split Run Cap 3MFD 450V
RC3.5X450	Mini-Split Run Cap 3.5MFD 450V
RC4X450	Mini-Split Run Cap 4MFD 450V
RC4.5X450	Mini-Split Run Cap 4.5MFD 450V
RC5X450	Mini-Split Run Cap 5MFD 450V
RC6X450	Mini-Split Run Cap 6MFD 450V
RC7.5X450	Mini-Split Run Cap 7.5MFD 450V
RC8X450	Mini-Split Run Cap 8MFD 450V
RC10X450	Mini-Split Run Cap 10MFD 450V
RC12.5X450	Mini-Split Run Cap 12.5MFD 450V
RC15X450	Mini-Split Run Cap 15MFD 450V
RC20X450	Mini-Split Run Cap 20MFD 450V

Mini-Split Mounting Brackets

- Sturdy steel construction
- 7 sizes available
- Capacity range from 240-440 lbs.

PART NO.	DESCRIPTION	SIZE	MAX CAPACITY	BTU SIZE RANGE
MB100	Mini-Split Bracket	14.5" X 17.75"	240 LBS	7,500-12,000
MB200	Mini-Split Bracket	15.5" X 17.75"	240 LBS	7,500-12,000
MB300	Mini-Split Bracket	16.5" X 21.65"	265 LBS	18,000-24,000
MB400	Mini-Split Bracket	16.5" X 21.65"	240 LBS	12,000-24,000
MB500	Mini-Split Bracket	19.25" X 21.65"	265 LBS	12,000-24,000
MB600	Mini-Split Bracket	15.35" X 17"	330 LBS	7,500-18,000
MB700	Mini-Split Bracket	18" X 18"	440 LBS	9,000-18,000

3-Wire Flowatch® Design Mini-Split Condensate Pump with Plastic Duct & Installation Kit

- Includes mini Flowatch® 2 pump
- Includes over 2 1/2 ft. of plastic duct
- Includes all mounting hardware
- Pre-mounted and wired in plastic duct
- 2 year warranty

PART NO.	DESCRIPTION
DE05LUB120	Flowatch® Design Pump & Installation Kit (115V)
DE05LUB130	Flowatch® Design Pump & Installation Kit (230V)

SEALED UNIT PARTS CO., INC.
PO Box 21, 2230 Landmark Place
Allenwood, NJ 08720 USA
www.supco.com

3-Wire Mini-Split Condensate Pumps

These quiet and reliable piston style pumps are designed to remove condensate water in mini-split systems up to 42,000 BTUs. The pump includes a NO/NC safety switch to shut the system down in the event of condensate overflow. These 2-piece compact size pumps include a waterproof pump module and detection module for easy installation.

Features / Benefits

- Removes condensate for systems up to 42,000 BTUs
- 24 foot maximum lift
- Vertical suction: 6 foot maximum
- USA and Canada agency affiliations: ETL Listed 4000786 CSA Certified C22.2 NO. 108 / Conforms to UL STD 778
- Noise level: <21dB @ 3.3' distance
- Thermally protected
- Alarm level to prevent overflow
- Waterproof connections prevent water ingress
- Piston pump provides long life
- Optional mounting kit: #GC1KFX2010
- 2 year warranty

PART NO.	DESCRIPTION
DE05LUB100	Flowatch® 2 Condensate Pump (115V)
DE05LUB110	Flowatch® 2 Condensate Pump (230V)

GC1KFX2010

Specifications

Voltages:	115/230 VAC Single Phase
Hertz:	50/60
Watts:	19
Rating:	70% Duty Cycle (example 7 seconds on/3 seconds off)
Safety Switch Contacts:	5 amp Maximum Resistive @ 250 VAC
Safety Switch Wiring:	3-wire = Orange (Common) / Purple (Normally Open) / Grey (Normally Closed)
Working Temperature:	41°F to 113°F (5°C to 45°C)
Storage Temperature:	37°F to 158°F (3°C to 70°C)

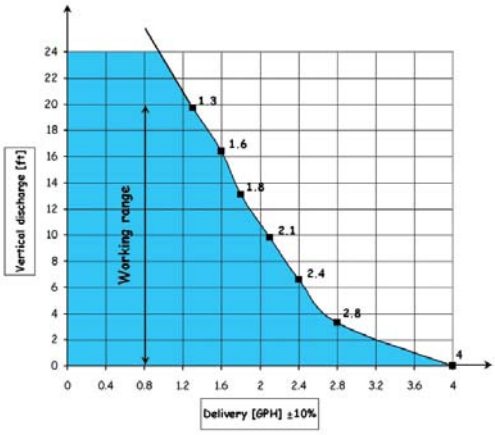

Safety Switch & Main Wiring

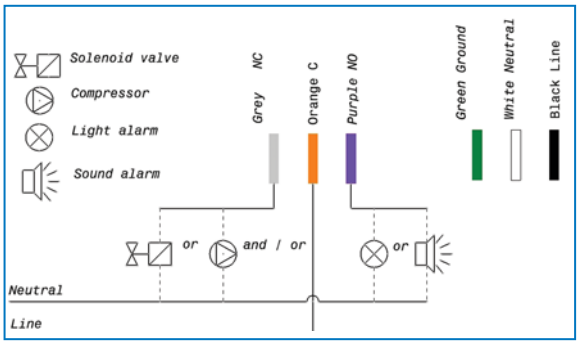

F566
02132015