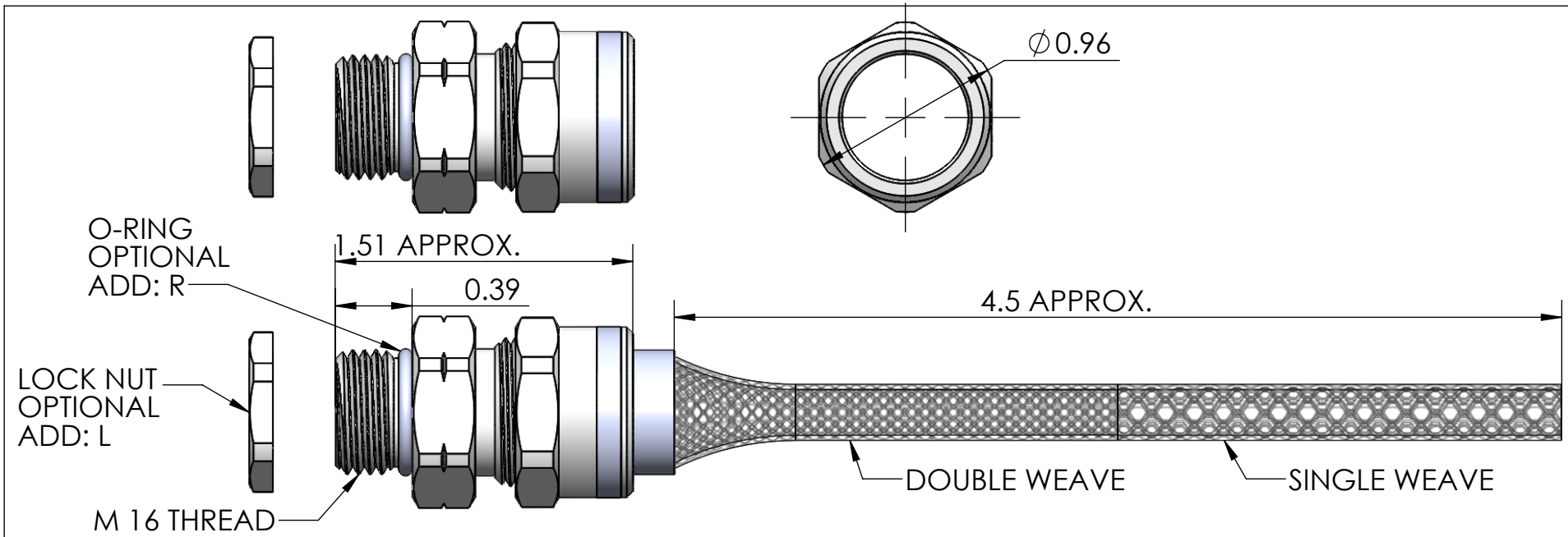

ITEM NO.	PART NUMBER	DESCRIPTION	MATERIAL	QTY.
1	RSM-161000-B	BODY	ALUMINUM	1
2	SRB-003 THRU SRB-005	BUSHING	NEOPRENE	1
3	0-100063	O-RING	BUNA-N	1
4	RSR-000-ND	NUT	ALUMINUM	1
5	RLM16-BR	LOCK NUT	BRASS, NICKLE PLATED	1
6	R-005-D	MESH	STAINLESS WIRE	1

RoHS COMPLIANT

CATALOG NUMBER	SEALING RANGE	BODY BORE
RSM-161003-E	.125 - .187	.455
RSM-161004-E	.187 - .250	.455
RSM-161005-E	.250 - .312	.455

REV.	DATE	CHANGE
A	8/13/13	DRAWING RELEASED

UNLESS OTHERWISE SPECIFIED:
DIMENSIONS ARE IN INCHES
TOLERANCES:
FRACTIONAL ± 1/64
ANGULAR: MACH ±1° BEND ±1°
ONE PLACE DECIMAL ±.015
TWO PLACE DECIMAL ±.010
THREE PLACE DECIMAL ±.005

INTERPRET GEOMETRIC TOLERANCING PER:

MATERIAL ALUMINUM

FINISH

DO NOT SCALE DRAWING

	NAME	DATE
DRAWN	JCN	8/13
CHECKED		
ENG APPR.		
MFG APPR.		
Q.A.		

PROPRIETARY AND CONFIDENTIAL

THE INFORMATION CONTAINED IN THIS DRAWING IS THE SOLE PROPERTY OF REMKE INDUSTRIES. ANY REPRODUCTION IN PART OR AS A WHOLE WITHOUT THE WRITTEN PERMISSION OF REMKE INDUSTIRES IS PROHIBITED.

BRIDGEPORT

TITLE:

RSM-161003-161004-161005-E SERIES

SIZE A

DWG. NO. RSM-161003-161004-161005-E ASSEMBLY

SCALE: 1.25:1

SHEET 1 OF 1

5 4 3 2 1