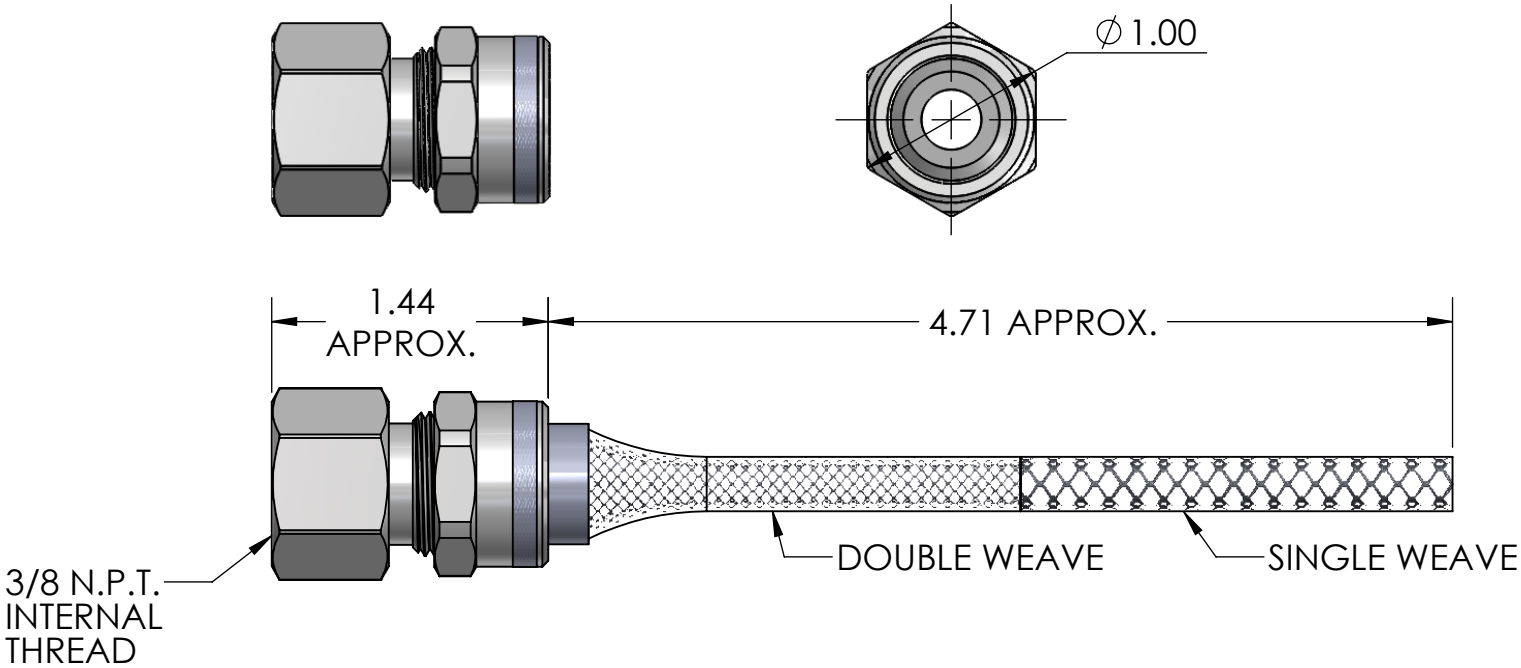

ITEM NO.	PART NUMBER	DESCRIPTION	MATERIAL	QTY.
1	RSRF-000-B	BODY	ALUMINUM	1
2	SRB-004-005	BUSHING	NEOPRENE	1
3	RSR-000-NDB	NUT	ALUMINUM	1
4	R-005-D	MESH	STAINLESS STEEL	1

CATALOG NUMBER	SEALING RANGE	BODY BORE
RSRF-004-E	.188 - .250	.460
RSRF-005-E	.250 - .312	.460

REV.	DATE	CHANGE
A	7/8/15	DRAWING RELEASED

UNLESS OTHERWISE SPECIFIED:
DIMENSIONS ARE IN INCHES
TOLERANCES:
FRACTIONAL ± 1/64
ANGULAR: MACH ±1° BEND ±1°
ONE PLACE DECIMAL ±.015
TWO PLACE DECIMAL ±.010
THREE PLACE DECIMAL ±.005

INTERPRET GEOMETRIC TOLERANCING PER:

MATERIAL

FINISH

DO NOT SCALE DRAWING

	NAME	DATE
DRAWN	JCN	7/15
CHECKED		
ENG APPR.		
MFG APPR.		
Q.A.		

PROPRIETARY AND CONFIDENTIAL

THE INFORMATION CONTAINED IN THIS DRAWING IS THE SOLE PROPERTY OF REMKE INDUSTRIES. ANY REPRODUCTION IN PART OR AS A WHOLE WITHOUT THE WRITTEN PERMISSION OF REMKE INDUSTIRES IS PROHIBITED.

REMKE
REMKE INDUSTRIES
310 CHADDICK DR, WHEELING, IL. 60090

TITLE:
RSRF-000-E SERIES

SIZE: A
DWG. NO. RSRF-004-005-E ASSEMBLY
SCALE: 1:1
SHEET 1 OF 1

T:\Solidworks Files\Assymblies (Customer Drawings)\ALUM\MESH ASSEMBLYS\DRW\

5 4 3 2 1