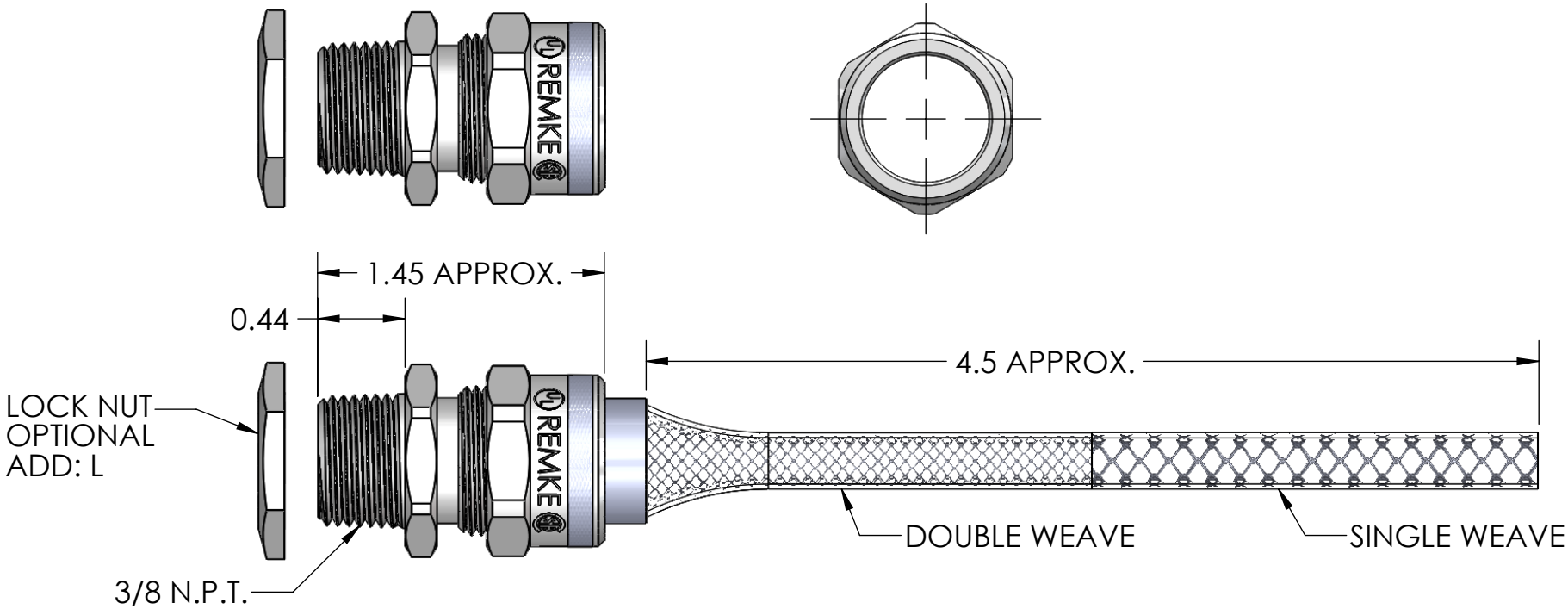


| ITEM NO. | PART NUMBER | DESCRIPTION | DESCRIPTION | QTY. |
|---|---|---|---|---|
| 1 | RSR-000-B | BODY | ALUMINUM | 1 |
| 2 | SRB-006 - SRB-007 | BUSHING | NEOPRENE | 1 |
| 3 | RSR-000-ND | NUT | ALUMINUM | 1 |
| 4 | LN-38 | LOCK NUT | ADD: L C.R.S. ZINC PLATED | 1 |
| 5 | R-007-D | MESH | STAINLESS WIRE | 1 |

RoHS COMPLIANT

| CATALOG NUMBER | SEALING RANGE | BODY BORE |
|---|---|---|
| RSR-006-E | .312 - .375 | .610 |
| RSR-007-E | .375 - .438 | .610 |

| REV. | DATE | CHANGE |
|---|---|---|
| A | 9/9/14 | DRAWING RELEASED |

UNLESS OTHERWISE SPECIFIED:
DIMENSIONS ARE IN INCHES
TOLERANCES:
FRACTIONAL ± 1/64
ANGULAR: MACH ±1° BEND ±1°
ONE PLACE DECIMAL ±.015
TWO PLACE DECIMAL ±.010
THREE PLACE DECIMAL ±.005

INTERPRET GEOMETRIC TOLERANCING PER:

MATERIAL ALUMINUM

FINISH

DO NOT SCALE DRAWING

| | NAME | DATE |
|---|---|---|
| DRAWN | JCN | 9/14 |
| CHECKED | | |
| ENG APPR. | | |
| MFG APPR. | | |
| Q.A. | | |

**PROPRIETARY AND CONFIDENTIAL**

THE INFORMATION CONTAINED IN THIS DRAWING IS THE SOLE PROPERTY OF REMKE INDUSTRIES. ANY REPRODUCTION IN PART OR AS A WHOLE WITHOUT THE WRITTEN PERMISSION OF REMKE INDUSTIRES IS PROHIBITED.

REMKE
*REMKE INDUSTRIES*
*310 CHADDICK DR, WHEELING, IL. 60090*

TITLE:
RSR-006-007 E SERIES

SIZE A

DWG. NO.
RSR-006-007-E ASSEMBLY

SCALE: 1.2:1

SHEET 1 OF 1

5 4 3 2 1