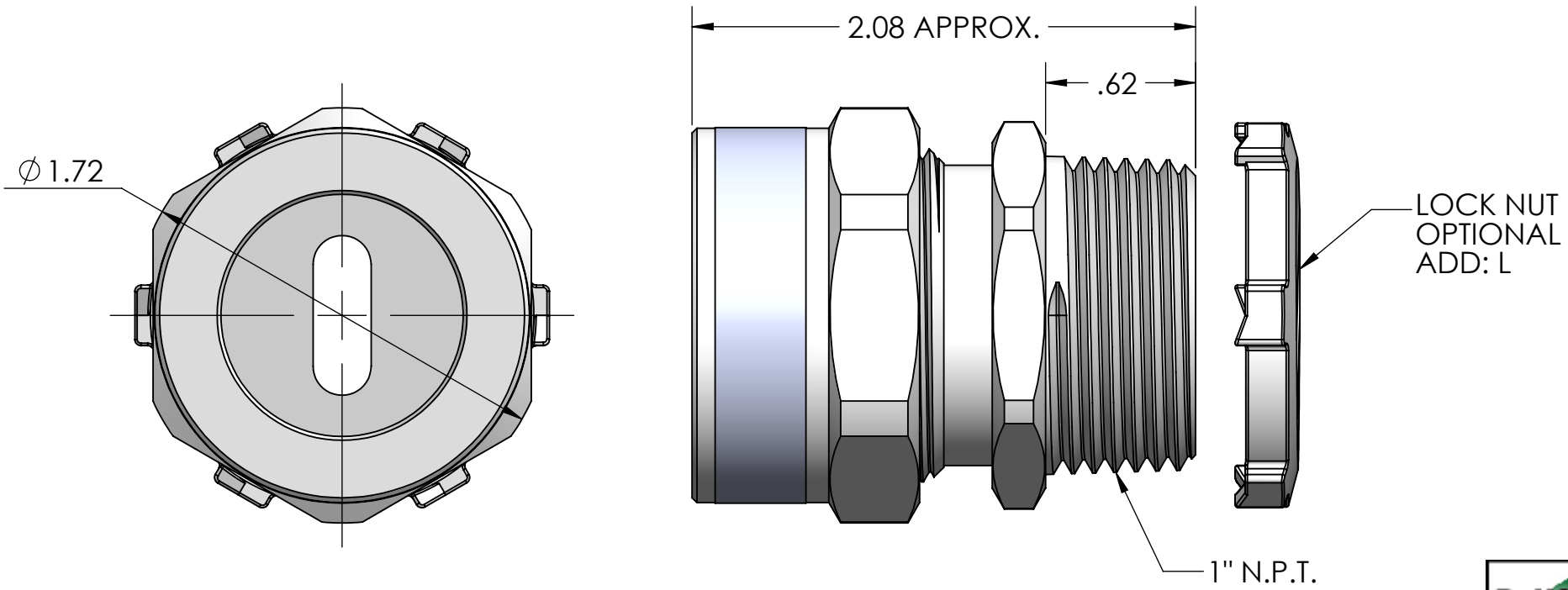

ITEM NO.	PART NUMBER	DESCRIPTION	MATERIAL	QTY.
1	RSR-300-B	BODY	ALUMINUM	1
2	SBF-3001-3002-3003	BUSHING	NEOPRENE	1
3	SW-300	WASHER	C.R.S. ZINC PLATED	1
4	RSR-300-NB	NUT	ALUMINIUM	1
5	LN-100	LOCK NUT	ADD: L, C.R.S. ZINC PLATED	1

PART NUMBER	SLOT SIZE	BODY BORE
RSF-3001	.660 X .240	.990
RSF-3002	.750 X .250	.990
RSF-3003	.890 X .290	.990

REV.	DATE	CHANGE
A	9/14/15	DRAWING RELEASED

UNLESS OTHERWISE SPECIFIED:
DIMENSIONS ARE IN INCHES
TOLERANCES:
FRACTIONAL ± 1/64
ANGULAR: MACH ±1° BEND ±1°
ONE PLACE DECIMAL ±.015
TWO PLACE DECIMAL ±.010
THREE PLACE DECIMAL ±.005

INTERPRET GEOMETRIC TOLERANCING PER:

MATERIAL ALUMINUM

FINISH

DO NOT SCALE DRAWING

	NAME	DATE
DRAWN	JCN	9/15
CHECKED		
ENG APPR.		
MFG APPR.		
Q.A.		

PROPRIETARY AND CONFIDENTIAL

THE INFORMATION CONTAINED IN THIS DRAWING IS THE SOLE PROPERTY OF REMKE INDUSTRIES. ANY REPRODUCTION IN PART OR AS A WHOLE WITHOUT THE WRITTEN PERMISSION OF REMKE INDUSTIRES IS PROHIBITED.

BRIDGEPORT

TITLE:

RSF-3000 SERIES

SIZE A

DWG. NO. RSF-3000 ASSEMBLY

SCALE: 1.5:1

SHEET 1 OF 1

T:\SOLIDWORKS FILES\Assymblies (Customer Drawings)\ALUM\RSF ASSEMBLYS\DRW\

5 4 3 2 1